ML006033

MATRA MARCONI SPACE	MetOp	Ref. : MO-IC-MMT-A2-0001 Issue : 2 Rev.: B Date : June 12th 1998 Page : i

Title

ADVANCED MICROWAVE SOUNDING UNIT - A2 INSTRUMENT INTERFACE CONTROL DOCUMENT.

AMSU-A2 ICD

	Name and Function	Date	Signature
Prepared by :	METOP Team		
Verified by :	JL. DUQUESNE *Instrument Interface Principal Engineer* *J-P.* GARDELLE *Integrated Payload Module APM*	12/06/98 12/06/98	
Approved by :	D. HERBIN *Product Assurance APM* Ch. BOUSQUET *System Engineering APM*		
Authorized by :	D. PAWLAK *MMS METOP Project Manager*		

Application authorized by	SSST (ESA / EUM)	Instrument Provider	Instrument Supplier	Instrument Supplier
	P. G. EDWARDS *METOP Project Manager (ESA)*	M. LANGEVIN *EPS Programme Manager (EUMETSAT)*	H. McCain POES Project Manager NASA GSFC	M. Mignogno NOAA POES Program Manager
	Date : 10 July 98	Date : 10 July 98	Date : July 10, 1998	Date July 10, 1998

Document type	Nb WBS	Keywords :

The distribution of this document and applicable / reference documents within Europe and North America is restricted to METOP partners only.

Title

ADVANCED MICROWAVE SOUNDING UNIT - A2 INSTRUMENT INTERFACE CONTROL DOCUMENT

AMSU-A2 ICD

	Name and Function	Date	Signature
Prepared by :	METOP Team		
Verified by :	JL. DUQUESNE *Instrument Interface Principal Engineer* JP. GARDELLE *Integrated Payload Module APM*	12/06/98 12/06/98	
Approved by :	D. HERBIN *Product Assurance APM* Ch. BOUSQUET *System Engineering APM*		
Authorized by :	D. PAWLAK *MMS METOP Project Manager*		

Application authorizedby:	*SSST (ESA / EUM)*	*Instrument Provider*	Instrument Supplier	Instrument Supplier
	P. G. EDWARDS *METOP Project Manager (ESA)* Date :	M. LANGEVIN *EPS Programme Manager (EUMETSAT)* Date :	H. McCain POES Project Manager NASA GSFC Date :	M. Mignogno NOAA FOES Program Manager Date :

Document type	Nb WBS	Keywords :

The distribution of this document and applicable / reference documents within Europe and North America is restricted to METOP partners only

Title

ADVANCED MICROWAVE SOUNDING UNIT - A2 INSTRUMENT INTERFACE CONTROL DOCUMENT

AMSU-A2 ICD

	Name and Function	Date	Signature
Prepared by :	METOP Team		
Verified by :	JL. DUQUESNE *Instrument Interface Principal Engineer* JP. GARDELLE *Integrated Payload Module APM*	12/06/98 12/06/98	
Approved by :	D. HERBIN *Product Assurance APM* Ch. BOUSQUET *System Engineering APM*		
Authorized by :	D. PAWLAK *MMS METOP Project Manager*		

	SSST (ESA / EUM)	*Instrument Provider*	*Instrument Supplier*	*Instrument Contractor*
Application authorized by :	P. G. EDWARDS *METOP Project Manager (ESA)* Date :	M. LANGEVIN *EPS Programme Manager (EUMETSAT)* Date :	D. CROSBY *AMSU-A Manager Code 480 GSFC (NASA)* Date :	W. MULLOOLY *AMSU-A Program Director (AEROJET)* Date :

BLANK

DOCUMENT CHANGE LOG

Issue/ Revision	Date	Modification Nb	Modified pages	Observations
Draft	Nov. 1995			New document - PR Issue
Draft 2	April 1996		All	Complete revision
Draft 3	Oct. 1996		All	Complete revision
Issue 1	Nov. 15th, 1996		All	Complete revision
Iss. 1 Rev. A	Jan. 1997	MO-FX-MMT-0080.97	8	
C/D proposal	August 1997	MO-NT-MMT-A24001	92	
Issue 2	April 7" 1998		All	Complete revision
Iss. 2 Rev. A	May 16th 1998	MO-MN-&CF-0005	25	
Iss. 2 Rev. B	June 12" 1998		17	LTP/826/RH June 2" 1998 + Typos

PAGE ISSUE RECORD

Issue of this document comprises the following pages at the issue shown

Pages	Issue / Revision	Pages	Issue / Revision	Pages	Issue / Revision	Pages	Issue / Revision
i	Iss. 2 Rev.B	3.1 to 3.77	Iss. 2 Rev. 0	6.1	Iss. 2 Rev.A		
ii	Iss. 2 Rev. C	3.78 3.79	Iss. 2 Rev.B	6.1, to 6.4	Iss. 2 Rev. C		
iii iv v vi	Iss. 2 Rev.B						
vii to xvii	Iss. 2 Rev. C						
		4.1 to 4.3	Iss. 2 Rev. 0				
		4.4 to 4.11	Iss. 2 Rev.B				
1.1 1.2	Iss. 2 Rev. 0	4.12 4.13	Iss. 2 Rev.A				
1.3	Iss. 2 Rev.B	4.14	Iss. 2 Rev.A				
1.4 to 1.14	Iss. 2 Rev. C	4.15 4.16	Iss. 2 Rev. 0				
1.15	Iss. 2 Rev.A	4.17 4.18	Iss. 2 Rev.B				
1.16 to 1.22	Iss. 2 Rev. C						
1.23	Iss. 2 Rev.A						
1.24 to 1.27	Iss. 2 Rev. 0	5.1	Iss. 2 Rev. 0				
		5.2 5.3	Iss. 2 Rev.A				
		5.4 to 5.7	Iss. 2 Rev. 0				
2.1 to 2.15	Iss. 2 Rev. C	5.8	Iss. 2 Rev.B				
2.16	Iss. 2 Rev.B	5.9 5.10	Iss. 2 Rev. 0				
2.17 to 2.19	Iss. 2 Rev.A	5.11 5.12	Iss. 2 Rev.A				
2.20 to 2.24	Iss. 2 Rev. 0	5.13	Iss. 2 Rev.B				
2.25 to 2.27	Iss. 2 Rev.A	5.14 to 5.17	Iss. 2 Rev. 0				
2.28 2.29	Iss. 2 Rev. 0	5.18	Iss. 2 Rev.B				
2.30	Iss. 2 Rev.A	5.19 to 5.23	Iss. 2 Rev. 0				
2.31 to 2.34	Iss. 2 Rev. 0						

DISTRIBUTION LIST

	MMS-F Toulouse
X	P.ARBERET
	J.C. ASTRUC
	J. AUGIER
	S. BARREAU
	P. BELLEAU
	A. BENICHOU
	R. BOTTON
	F. BINTER
	P. BISOGNIN
	M. BOUFFARD
X	C. BOUSQUET
	S. BRACONNIER
X	J. CHAMBON
	C. BUGE
	E BRUGNERA
	C. BUTHION
	X. CALMET
X	S. CAMILLERI
	v. COSCULLUELA
	F. CARRE
	A. CHAZAL
	G. CROS
	A. DABASSE
X	M. DELGADO
	A. DESPRAIRIES
	F. DI GESU
	JP. DUMAS
X	J.L. DUQUESNE
	C. DURAND
	JPS. DURAND
	L. DUROU
	C. ETIENNE
	D. FORE;
	D. FOSSE
	J.F. GAJEWSKI
	J. GALAN
	Ph. GALLAND
X	JP. GARDELLE
	X. GEORJON
	J.M. GOUTOULE
	X. G'SELL
	M. GUGGARI
	M. HENAULT
X	D. HERBIN
X	F. JOUFFROY
	P. LAURENS
X	D. LEBRETON
	M. LEFEBVRE
	A. LEHMAN
	A. MARTIN
X	J.P. MIELLOU
	I. MOLES
	P. MOLLET
	P. MOULINIER
X	JM. OBERTO
	J. OSKARSSON
	M. PAHLE
X	D. PAWLAK
	S. PEDEN
	T. PONCIN
	JJ. PUISSANT
	A. REUILH
	J.P. RIEU
	C. SALAME

	MMS-F Toulouse
	V. SALMON
	D. SCOUARNEC
	s. TOUZEAU
X	J. TISSERANT
	S. VAL SERRA
	B. VATAN
X	P. CORRADIN
X	M. FAVREAU

X	ESTEC
	K. BUCHLER
	B. BERGAGLIO
	B. BERRUTI
	S.J. BOSMA
	S. CARLIER
	P.G. EDWARDS
	S. FIORILLI
	R.HFRANCIS
	R. GELSTHORPE
	A. HAHNE
	RHALM
	RICRUTSCH
	A. LEFEBVRE
	S. LOKAS
	Y. MENARD
	B. NAULAIS
	ENERI
	N. STRICKER

X	EUMETSAT
	P. BLYTHE
	ABOISSN
	D. DIEBEL
	S. ERIKSSON
	J. EVANS
	M. LANGEVIN
	G. MASON
	A. RUBACH-LARSEN
	W. J. SEYMOUR

X	DORNIER
	R. BELAU
	J. FRITZ
	Ii. HEIDEMANN
	R HENDRICKS
	A HERTLE
	K.O. HIENERWADEL
	HF. HONOLD
	M. HOPFGARTEN
	H. KLOSTERMANN
	K. LINDEMANN
	V. LINDEICL-GEL
	D. MILLER
	HJ. MULLER
	Ii. ROMER
	B. SACHSSE
	F. TANNER

X	MMS-SS
	R. BAKER
	E. BRAY
	R. CAHILL
	M. HOSPEL
	A. LAING
	S. MITCHELL
	D. PIDOUX
	C. PRIOR
	H. SMITH
	P. SOPPIT
	L STEWART
	K. TOMKINS
	M. TOWNEND
	J. TRIPP

	ALENIA
	P. BIOCCA
	R. BORDI
	A. CAPECE
	A. CAPUZI
	A. RUSSO
	A. SALOME
	C. SCACCHETTI

	DNV
	P.O. ARALDSEN

	FOKKER
	N. BADER
	T. KONINK
	D. MAWIRA
	A. VERBAAS
	R. ZWANENBURG

	AEROJET
	W. MULOOLY

	AS CANNES
	P.PULITINI

	CNES
	G. PORTAS
	G. CHALON

	GALILEO
	R. VERATTI

	ITT
	M. V. BERTIN

	MMS-P
	K. BAKER

	NASA/GSFC
	R. ALEMAN
	G. COLON
	D. CROSBY

	NDH
	J.Y.R. LAPOINTE

	NOAA
	A.M. MUCKLE

	PANAMETRICS
	F.B. SELLERS

TBC / TBD LISTS

This document includes several TBD (to be defined) and TBC (to be confirmed) on the following pages.

TBD_{AMS2} on Pages	TBC_{AMS2} on Pages
2.2 2.20 2.27 2.29	2.13 2.26
3.7 3.32 *3.77*	*3.78*
4.2	
5.2 5.3 5.10 5.11 5.125.145.22	5.2 5.3 5.7 5.22
6.2 6.3	

TBD_{MET} on Pages	TBC_{MET} on Pages
	1.15 1.16 1.17 1.18 1.19
2.1 2.11 2.12 2.24 2.25 2.34	2.11 2.13 2.24 2.33
	-
	4.2 4.3 4.12 4.13
5.10	5.3
6.1 6.3	-

TABLE OF CONTENTS

1. GENERAL INFORMATION .....

1.1. GENERAL 1.1

1.1.1. Purpose of the Document 1.1

1.1.2. Documentation 1.1

1.1.2.1. Applicable Documentation 1.1

1.1.2.2. Reference Documentation 1.2

1.1.3. Acronym List 1.3

1.2. INSTRUMENT PRESENTATION 1.6

1.2.1. General 1.6

1.2.2. Scientific Objectives 1.6

1.2.3. Functional Description 1.7

1.2.3.1. Antenna / Drive / Calibration Subsystem 1.7

1.2.3.2. Receiver Subsystem 1.7

1.2.3.3. Signal Processor Subsystem 1.7

1.2.3.4. Structural / Thermal Subsystem 1.8

1.3. METOP SYSTEM OVERVIEW 1.10

1.3.1. Spacecraft Architecture Concept 1.10

1.3.2. METOP Reference Frames 1.13

1.3.2.1. Satellite Reference Frame 1.13

1.3.2.2. Instrument Reference Frame 1.13

1.3.3. Orbital Parameters 1.15

1.3.3.1. Reference Orbit 1.15

1.3.3.2. Drift Orbit 1.15

1.3.4. Satellite Mission Phases and Operations 1.15

1.3.4.1. Mission Phases 1.15

1.3.4.2. Satellite Operational Modes 1.16

1.3.4.2.1. Nominal Operational Mode 1.16

1.3.4.2.2. Orbit Control Modes 1.16

1.3.4.2.3. Acquisition Modes 1.18

1.3.4.2.4. Contingency Cases.. ..... 1.18

1.3.4.2.5. Safe Mode (Sun Pointing) 1.19

1.4. INSTRUMENT OPERATIONAL MODES 1.20

1.4.1. Operational Constraints 1.20

1.4.2. Instrument Mode Overview 1.21

1.4.2.1. AMSU-A2 Off Mode 1.21

1.4.2 .2. AMSU-A2 Measurement Mode 1.21

1.4.2.3; AMSU-A2 Unique Mode 1.21

1.4.3. Cross Reference Between Instrument and PLM Modes 1.22

1.5. INSTRUMENT LAUNCH AND IN-ORBIT OPERATIONS 1.23

1.51. General 1.23

1.5.2. Instrument Sequences to AMSU-A2 Off Mode 1.24

1.5.2.1. Nominal Sequence to Off Mode 1.24

1.5.2.2. Emergency Sequence to AMSU-A2 Off Mode 1.24

1.5.2.3. Recovery From Emergency Switch-Off 1.24

1.5.3. Instrument Sequence to and During AMSU-A2 Measurement Mode 1.25

1.5.3.1. Switch-on From Off Mode to Measurement Mode 1.25

1.5.3.2. Switch-on From Unique Mode to Measurement Mode 1.25

1.5.3.3. Sequences During AMSU-A2 Measurement Mode 1.25

1.5.4. Instrument Sequence to AMSU-A2 Unique Mode 1.27

1.5.4.1. Warm Calibration Unique Mode 1.27

1.5.4.2. Cold Calibration Unique Mode: 1.27

1.5.4.3. Nadir Position Unique Mode 1.27

2. MECHANICAL AND THERMAL INTERFACE DESCRIPTION .....

2.1. GENERAL 2.1

21.1. Interface Definition 2.1

2.1.2. Module / Unit Identification 2.2

2.1.3. Reference Frames 2.2

2.1.3.1. Satellite Reference Frame 2.2

2.1.3.2. Instrument Reference Frame 2.2

2.1.4. Interface Drawings 2.2

2.1.4.1. Mechanical Interface Drawings 2.2

2.1.4.2. Thermal Interface Drawing 2.3

2.1.4.3. Field of View Interface Drawing 2.3

2.2. MECHANICAL INTERFACE DESCRIPTION 2.9

2.2.1. Physical Envelope 2.9

2.2.2. Field of View Defmition 2.9

2.2.3. Mass Properties 2.10

2.2.3.1. Mass and Centre of Mass Location 2.10

2.2.3.2. Moments of Inerti a. 2.10

2.2.4. Instrument Mounting Attachments 2.11

2.2.4.1. Mounting Description 2.11

2.2.4.2. Mounting Hole Position and Reference Point (Hole) 2.11

2.2.4.3. Mounting Surface Characteristics 2.11

2.2.4.4. Instrument Location 2.11

2.2.4.5. Materials at Interfaces 2.12

2.2.4.6. Thermo-Elastic Interface 2.12

2.2.4.7. Grounding Provisions 2.12

2.2.5. Accessibility 2.13

22.6. On-Ground Alignment 2.14

2.2.6.1. Alignment Method 2.14

2.26.2 Alignment Hardware 2.14

2.2.6.3. Alignment Tolerances for Instrument Interfaces 2.1s

2.27. Deployment Mechanisms and Pyros 2.1s

2.2.7.1. Deployment Mechanisms 2.1s

2.2.7.2. Pyros 2.15

2.2.8. Interface Structural Design 2.16

2.2.8.1. AMSU-A2 Limit Loads 2.16

2.2.8.2. METOP Induced Limit Loads 2.16

2.2.8.3. l-g Interface Loads 2.17

2.2.8.4. Structural Frequency Characteristics 2.20

2.2.8.4.1. Launch Configuration Frequency Characteristics 2.20

2.2.8.4.2. In-Orbit Configuration Frequency Characteristics 2.20

2.2.8.5. Structural Mathematical Models - Applicability for AMSU-A2 ..... 2.20

2.2.8.5.1. Full Static Model 2.20

2.2.8.5.2. Reduced Dynamic Model - Launch Configuration 2.20

2.2.8.5.3. Reduced Dynamic Model - Deployed (In-Orbit) Configuration 2.20

2.2.8.5.4. Simplified Thermo-Elastic Model 2.20

2.3. THERMAL INTERFACE DESCRIPTION 2.21

2.3.1. Thermal Control Concept 2.21

2.3.1.1 Thermal Control During Nominal Operations 2.21

2.3.1.2. Thermal Control During Non Nominal / Contingency Operations 2.21

2.3.1.2.1. General 2.21

2.3.1.2.2. Transient Attitudes 2.21

2.3.1.2.3. METOP Orbit Control Modes 2.21

2.3.1.2.4. METOP Safe Mode 2.21

2.3.2. Instrument Thermal Requirements 2.22

2.3.2.1. Instrument Temperature Range 2.22

2.3.2.1-l. On-Orbit Temperature Range 2.22

2.3.2.1.2. Ground Testing Temperature limits 2.22

2.3.2.1.3. Ground Storage and Transportation Temperature Range 2.22

2.3.2.2. Temperatures at the Interface 2.22

2.3.23. Radiative Requirements 2.23

23.3. Thermal Control Budgets 2.23

2.3.3. 1. Heater Power Budgets 2.23

2.3.3.2. Instrument Thermal Dissipation 2.23

23.3.3. Heat Exchange Budgets 2.23

2.3.3.3.1. Conductive Heat Transfer 2.23

2.3.3.3.2. Joint Characteristics 2.24

2.3.3.3.3. Radiative Heat Transfer 2.24

2.3.4. Thermal Interfaces 2.25

2.3.4.1. Conductive Interfaces 2.25

i.3.4.1.1. Description 2.25

2.3.4.1.2. Bolts 2.25

2.3.4.1.3. Thermal Stand-Offs 2.25

2.3.4.2. Radiative Interfaces 2.25

2.3.4.2.1. Radiator Characteristics 2.25

2.3.4.2.2. Thermo-Optical Properties 2.25

2.3.4.3. Thermal Heat Capacity 2.26

23.4.4. Instrument Temperature Measurement 2.26

2.3.4.5. Heater Definition 2.27

2.3.4.6. Thermal Interface Models 2.27

2.4. INSTRUMENT AND DISTURBANCE INTERFACES 2.28

2.4.1. Instrument Induced Disturbances and Shocks 2.28

2.4: 1.1. Non-Recurring Transient Events 2.28

2.4.1.2. Continuous / Recurring Transient Events.. 2.29
2.4.1.3. Flexible Modes 2.30
2.4.1.4. Induced High Frequency Disturbances (Micro-Vibrations). 2.30
2.4.2. Compatibility With Satellite Dynamic Environment 2.33
2.4.2.1. General Mission Environment 2.33
2.4.2.2. Environment During Satellite Deployment Sequence 2.33
2.4.23. Micro-Vibration Environment 2.34

3. COMMAND AND CONTROL, MEASUREMENT DATA, ELECTRICAL, EMC AND RFC INTERFACE DESCRIPTION

3.1. ELECTRICALINTERFACE OVERVIEW 3.1

3.2. COMMAND AND CONTROL FUNCTIONAL DESCRIPTION 3.2

3.2.1. Protocol 3.2

3.2.2. Telecommands 3.2

3.2.2.1. Telecommand Definition 3.3
3.22.2. Telecommand Functional Description 3.4

3.2.3. Housekeeping Telemetry 3.7

3.23.1. General Requirements 3.7
3.2.3.2. Digital B Telemetry 3.7
3.23.3. Analog Telemetry 3.9

3.2.4. Telecommand Verification 3.13

3.2.5. METOP Specific Thermal Control Electrical Interfaces 3.14

3.2.6. Satellite Services / Synchronization 3.14

3.3. MEASUREMENT DATA TRANSFER FUNCTIONAL DESCRIPTION 3.15

3.3.1. Data Rate 3.15

3.3.2. Measurement Data Aquisition 3.15

3.3.3. Measurement (Digital A) Data Format 3.19

3.3.3.1. Data Format in AMSU-A2 Measurement Mode 3.19
3.3.3.2. Data Format in AMSU-A2 Unique Mode (Warm Calibration). 3.19
3.3.3.3. Data Format in AMSU-A2 Unique Mode (Cold Calibration) 3.19
3.3.3.4. Data Format in AMSU-A2 Unique Mode (Nadir Position). 3.19
3.3.3.5. AMSU-A2 Data Word Description and Temperature Sensor Assignment 3.25

3.4. POWER ELECTRICAL INTERFACES 3.28

3.4.1. Overview 3.28

3.4.2. Power Demand 3.31

3.4.3. Power Electrical Interface Requirements 3.33

3.4.3.1. Power Interface Data Sheets 3.33

3.4.3.2. Power Interface Circuits 3.40

3.4.4. Power Connectors 3.42

3.4.5. Power Pin Allocation Lists 3.43

3.5. SIGNAL ELECTRICAL INTERFACES 3.45

3.5.1. Overview 3.45

3.5.2. Signal Electrical Interface Requirements 3.45

3.5.2.1. Signal Electrical Interface Data Sheets 3.47

3.5.2.2. Signal Electrical Interface Circuits 3.57

3.5.3. Signal Electrical Connectors 3.61

3.5.4. Signal Electrical Pin Allocation Lists 3.62

3.6. TEST INTERFACES 3.70

3.6.1. Electrical Test Interface Requirements 3.70

3.6.1.1. Interface Data Sheets 3.70

3.6.1.2. Interface Circuits 3.70

3.6.2. Electrical Test Interface Connectors 3.70

3.6.3. Electrical Test Interface Pin Allocation List 3.70

3.7. HARNESS 3.71

3.8. EMC INTERFACE DESCRIPTION 3.72

3.8.1. Electrical Bonding 3.72

3.8.1.1. General 3.72

3.8.1.2. Joint Faces 3.72

3.8.1.3. Structural Parts 3.72

3.8.1.3.1. DC Resistance Between Mating Metal Structure Parts 3.72

3.8.1.3.2. Bonding of Moveable Parts 3.72

3.8.1.3.3. Bonding of Structural CFRP Parts 3.72

3.8.1.3.4. Bonding of Carbon Fibre Face Sheets 3.72

3.8.1.3.5. Bonding of Aluminium Honeycomb 3.72
3.8.1.3.6. Bonding of Metal Fittings 3.72
3.8.1.4. Unit Housings 3.72
3.8.1.4.1. Bonding of Unit Cases 3.72
3.8.1.4.2. Bonding of Thermally Isolated Boxes 3.73
3.8.1.4.3. Bonding of Unit Mounted on CFRP of Non-Conductive Parts.. ..... 3. . 7 3
3.8.1.4.4. DC Resistance Between Adjacent Unit Case Parts ..... 3 . 7 3
3.8.1.4.5. DC Resistance Between Bonding Stud and Mounting Feet.. ..... 3.73
j.8.1.5. Thermal Blankets 3.73
3.8.1.5.1. Bonding of Thermal Blankets 3.73
3.8.1.5.2 Thermal Blanket Surface Resistance 3.73
3.8.1.6. Other Conductive Components 3.73
3.8.1.7. Cable and Harness Shidds 3.73
3.8.1.8. Connectors 3.73
3.8.2. Grounding and Isolation 3.74
3.8.2.1. + 28 V Main Power Ground 3.74
3.8.2.2 + 28 V Switched Telemetry Ground 3.74
3.8.2.3. + 28 V Pulse Load Ground 3.74
3.8.2.4. + 10 V Interface Ground 3.74
3.8.2.5. Signal Ground 3.74
3.8.3. Shielding ..... '3.76
3.8.3.1. Wire Shielding 3.76
3.8.3.1.1. Bonding of Shields 3.76
3.8.3.1.2. Overall Shield 3.76
3.8.3.1.3. Shields as Current-Carrying Conductors.. ..... 3.76
3.8.3.2. Case Shielding 3.76
3.8.4. AMSU-A2 Frequency Characteristics 3.76
3.8.5. Magnetic Moment 3.77
3.8.6. EMC Performance Requirements ..... 3 . 7 7
3.9. RF INTERFACE DESCRIPTION 3.78
3.9.1. Maximum Allowed Interference 3.78
3.9.2. Local Oscillator Emissivity 3.79

4. INSTRUMENT VERIFICATION DESCRIPTION .....

4.1. MECHANICAL / STRUCTURAL VERIFICATION 4.1

4.1.1. Structural Analysis 4.1

4.1.1.1. Quasi-Static Loads (Interface) 4.1

4.1.1.2. Structural/Dynamic A..... 4.1

4.1.1.3. Instrument Shock Environment 4.1

4.1.2. Structural Tests 4.1

4.1.2.1. Structural Mathematical Model Validation.. ..... 4.1

4.1.22. Vibration Test : High Level Sine Sweep 4.2

4.1.2.3. Vibration Test : Sine Burst 4.2

4.1.2.4. Vibration Test : Random Levels 4.2

4.1.2.5. Acoustic Tes t. 4.3

4.2. THERMAL VERIFICATION : THERMAL TESTS 4.4

4.2.1. Thermal Balance Test 4.4

4.2.2. Thermal Vacuum Tests 4.4

4.3. EMC VERIFICATION 4.5

4.3.1. EMC Performance Requirements 4.5

4.3.1.1. Conducted Emissio n. 4.5

4.3.1.1.1. AMSU-A2 Design Requirements 4.5

4.3.1.1.2. METOP Requirements 4.6

4.3.1.2. Conducted Susceptibility 4.8

4.3.1.3. Radiated Emission 4.10

4.3.1.3.1. Mil-Std-RE02 Requirements 4.10

4.3.1.3.2. SARR, SARP-3 and ADCS Receiver Channel Guard Limits 4.10

4.3.1.3.3. METOP Requirements 4.12

4.3.1.4. Radiated Susceptibility 4.13

4.3.2. EMC Analysis 4.14

4.3.3. EMC Tests 4.14

4.4. ELECTRICAL FUNCTIONAL VERIFICATION 4.15

4.4.1. Electrical Interface Tests 4.15

4.4.2. Functional Test 4.15

4.4.3. Performance Test 4.15

5. INSTRUMENT GSE AND AIV INTERFACES

5.1. INSTRUMENT GSE DESCRIPTION 5.1

5.1.1. Bench Test Equipment 5.1

51.2. GSE for Integration with PLM OCOE 5.2

5.1.3. Mechanical Ground Support Equipment 5.3

5.1.4. Self-Contained Special Test Equipment 5.3

5.2. INSTRUMENT GSE INTERFACES 5.4

5.2.1. Interfaces with PLM OCOE 5.4

5.2.1.1. General 5.4

5.2.1.2. Stimulus/Feedback Equipment Interface 5.7

5.2.1.2.1. Physical / Electrical Interface 5.7

5.2.1.2.2. Protocol Interface 5.7

5.2.1.2.3. Stimulus / Feedback Data Handling Requirements 5.7

5.2.1.3. Interface with Instrument-Provided Data Processing Equipment 5.7

5.2.1.3.1. Physical/Electrical Interface 5.7

5.2.1.3.2. Protocol Interface 5.7

5.2.1.4. Measurement Data Evaluation 5.8

5.2.1.4.1. Instrument Measurement Data Format Definition 5.8

5.2.1.4.2. Reference Data Presentation 5.9

5.2.1.4.3. Data Comparison Requirements 5.9

5.2.1.4.4. Data Processing Algorithms 5.9

5.2.2. Interfaces with the PLM On-Board Equipment 5.10

5.2.2.1. Test Harness and Connectors 5.10

5.2.2.2. Special Test Adapters (T-Junctions. Break-Out Boxes) 5.10

5.2.2.3. Stimuli Source Configuration / Arrangement Requirement 5.10

5.2.3. Interfaces With Other PLM GSE 5.10

5.2.4. Interfaces with AIT and Launch Site Facilities 5.11

5.2.4.1. Mains Power 5.11

5.2.4.2. Cooling / Thermal Dissipation Requirements 5.11

5.2.4.3. Purging Gas Requirements 5.11

5.2.4.4. GN_2 / LN_2 Supply 5.11

5.2.4.5. Test Chamber Wall Feed-through Panels 5.11

5.2.4.6. Public Data Net Communication Requirements 5.12

5.2.4.7. Physical Interfaces 5.12

5.3. INSTRUMENT GROUND OPERATION REQUIREMENTS 5.13

5.3.1. General 5.13

5.3.2. Command and Control Sequences 5.14

5.3.2.1. Ambient Conditions 5.14

5.3.2.2. Thermal Vacuum Conditions 5.14

5.3.3. Hazards/Precautions 5.14

5.4. INSTRUMENT ACCEPTANCE AT AIT SITE 5.15

5.4.1. Unpacking / Packing and Handling Requirements 5.15

5.4.2. Incoming Inspection 5.15

5.4.3. Instrument Self-Compatibility Test 5.15

5.5. INTEGRATION ON METOP 5.16

5.5.1. Pre-Integration 5.16

5.5.2. Mechanical / Thermal Integration 5.18

5.5.3. Electrical Integration and IST's 5.18

5.5.4. Integration of GSE 5.19

5.5.4.1. Integration of GSE with the Flight Equipment 5.19

5.5.4.2. GSE Integration with PLM OCOE 5.19

5.6. INSTRUMENT OPERATION CONSTRAINTS DURING PLM AND SATELLITE SYSTEM TESTS 5.20

5.6.1. System Environmental Test Levels 5.20

5.6.1.1. Structural Tests 5.20

5.6.1.2. Thermal Tests 5.20

5.6.1.3. EMC/RFC Tests 5.20

5.6.2. Function and Performance Tests 5.20

5.6.2.1. System Functional Tests (SFT) 5.20

5.6.2.2. Special Performance Test (SPT) 5.20

5.6.2.3. Abbreviated Functional Tests (AFT) 5.21

5.7. INSTRUMENT CONSTRAINTS ON GROUND ENVIRONMENTAL CONDITIONS 5.22

5.7.1. AIT Site 5.22

5.7.2. Launch Site 5.22

5.7.3. Transportation 5.22

5.7.4. Storage 5.22

5.8. LAUNCH CAMPAIGN 5.23

5.8.1. Launch Preparation 5.23

5.8.2. Red Tagged Items 5.23

6. PRODUCT ASSURANCE .....

6.1. CLEANLINESS /CONTAMINATION 6.1

6.1.1. Deposited Contamination Level 6.1

6.1.2. Integration Facilities 6.1

6.1.3. Instrument Aperture Protection 6.1

6.1.4. Purging 6.1

6.1.5. Space Conditioning 6.1

6.1.6. Contamination Witness Plate 6.2

6.1.7. Decontamination Features / Heaters 6.2

6.1.8. Instrument Bagging 6.2

6.2. FAILURE PROPAGATION THROUGH THE INTERFACES 6.3

6.3. SAFETY REGULATIONS 6.4

This document has been elaborated by MATRA MARCONI SPACE along with DORNIER.

1. GENERAL INFORMATION

BLANK

1.1. GENERAL

1.1.1. Purpose of the Document

This document is the AMSU-A2 Instrument Interface Control Document. It deals with the interface definition between the instrument and the METOP satellite.

The ICD document forms the unique formal definition on engineering, ground and flight operations for the METOP programme, specifying the bii requirements between ESA and the Instrument Supplier. It is configuration controlled by the METOP project team and formally signed off by ESA, the Instrument Supplier and the METOP prime contractor. The instrument supplier is NOAA/NASA

As a single point control of the technical interfaces, the ICD :

- Defines the technical resources allocated to the instrument.
- Defines the detailed mechanical, thermal and electrical interfaces between the instrument and the satellite.
- Defines the design verification programme which shall be implemented to demonstrate compliance with the METOP / AMSU-A2 interface requirements.
- Defines the detail& mechanical, electrical and protocol interfaces between the instrument ground support equipment and the METOP PLM ground support equipment.
- Defines the operational interface applicable during ground, launch and flight phases.

The objective of the ICD is to ensure that :

- The instrument is designed, built and verified within the constraints imposed by the overall payload complement, satellite and launch vehicle,
- The satellite Prime Contractor is able to design, build and verify the satellite in such a manner that all instruments can be successfully integrated into the system,
- The spacecraft system can be successfully launched and operated to achieve the mission objectives of the METOP programme.

1.1.2. Documentation

In cases of conflict between the following applicable documents and the present ICD, the agreement or definition in this AMSU-A2 ICD shall govern.

1.1.2.1. Applicable Documentation

AD1. METOP Product Assurance Requirements for NOM Instruments
Ref. MO-RS-ESA-PA-0065

AD2.. METOP Finite Element Model Requirement Specification For Structural Analyses
Ref. MO-RS-MMT-SY-0008 TBC metop

AD3. Satellite Thermal Model Requirement Specification, Ref. MO-RS-MMT-SY-0009

AD4. Electromagnetic Interference Characteristics. Measurement of, MIL-STD-462C.

AD5. NOAA Instrument GSE-to-METOP Interface Requirements, Ref. GSFC S-480-91.

AD6. AMSU-Al and AMSU-A2 Instrument Thermal Interface Mathematical Model Report Ref. SAI-RPT-082

AD7. AMSU-A2 Instrument Thermal Interface Mathematical Model (Ref. LTS/0200/BB)

ADS. AMSU-A2 Finite Element Model for Thermo-Elastic Analysis (Ref. LTS/03 12/BB)

AD9. AMSU-A2 Thermo-Elastic Model (Ref. LTS/0312/BB)

AD10. PLM EGSE Internal Interface Control Document, Ref. MO-ID-DGR-PM-0018.

AD11. AMSU-A2 Fixed and Variable Calibration Target Assembly, Ref. 1333160 (AER).

AD12a. Target Assembly, Ref. 1333161 (AER).

AD12b. Standard, Calibration Assembly (-A2), Ref. 1333202 (AER)

AD13. AMSU-A Blackbody Spacecraft Test Targets Operation and Maintenance Manual, Ref. 10273 (AER).

AD14. Handling Plate Assembly, Ref. 1333060 (AER).

AD15a. Spacecraft Integration Fixture Assembly, Ref. 1333090 (AER).

AD15b. Rotating Handling Fixture, Ref. 1333061 (AER).

AD15c. Vertical Lift Fixture, Ref. 1338217 (AER).

AD16. AMSU-A System Operation and Maintenance Manual, Ref. AE-26438 (AER)

AD17. Special Test Equipment (STE) Operation and Maintenance Manual, Ref. AE-26157A (AER).

1.1.2.2. Reference Documentation

RD1. AMSU-A Performance and Operation Specification, Ref. S-480-80

RD2. Performance Assurance Requirements for the Advanced Microwave Sounding Unit - A Ref. S-480-79

RD3. ATN-K,L,M General Instrument Interface Specification, Ref. IS-3267415

RD4. Unique Interface Specification for the AMSU-A2, Ref. IS-2624483

RD5. Void

RD6. Void

RD7 AMSU-A2 Functional Block Diagram, Ref. 1357394

RD8. EMC Test Summary High Energy Level, Electric Field Susceptibility Tests for AMSU-A1&A2, Ref. 10109, dated October 1992

RD9. Spacecraft Integration for the AMSU-A System, Ref. AE-26154A

RD10. Void

RD11. Requirements for the Data Acquisition Block for NOAA Instruments, Ref. MO-RS-DOR-PM-0025.

1.13. Acronym List

AD	Applicable Document
A-DCS	Advanced Data Collection System
AIT	Assembly, Integration & Test
AIV	Assembly, Integration & Verification
AMSU-Al	Advanced Microwave Sounding Unit 1
AMSU-A2	Advanced Microwave Sounding 'Unit 2
ARGOS	Meteorological Data Collection and Location System
ASCAT	'Advanced Wind Scatterometer
AVHRR/3	Advanced Very High Resolution Radiometer
BOL	Beginning of Life
C&C	Command & Control
CAM	Coarse Acquisition Mode
CCU	Central Computer Unit (SVM)
CR	Customer Furnished Instrument
CRA	Combined Receive Antenna (A-DCS, SARR, SARP-3)
DBU	Digital Bus Unit
DC	Direct Current
DSPG	Distributed Single Point Grounding
DTA	DCS Transmit Antenna
EGSE	Electrical Ground Support Equipment
EMC	Electromagnetic Compatibility
EMI	Electromagnetic Interference
EOL	End of Life
FAM	Fine Acquisition Mode
FEM	Finite Element Model
FMECA	Failure Modes, Effects and Criticality Analysis
FMU	Formatting and Multiplexing Unit
FOV	Field of View
FPM	Fine Pointing Mode

Gbit	Gigabits
GDO	Gunn Diode Oscillator
GNSS	Global Navigation Satellite System
GOME-2	Global Ozone Monitoring Experiment
GRAS	GNSS Receiver for Atmospheric Sounding
GSE	Ground Support Equipment
H/W	Hardware
HIRS/4	High Resolution Infra-Red Radiation Sounder
HK	House Keeping
HRPT	High Resolution Picture Transmission
I/F	Interface
IASI	Infra-red Atmospheric Sounding Interferometer
ICD	Interface Control Document
ICU	Instrument Control Unit
IST	Integration System Test
kbps	kilobits per second
KLM	NOAA K, L. M series of satellites
LEOP	Launch and Early Orbit Phase
LO	Local Oscillator
LRPT	Low Resolution Picture Transmission
Mbps	Megabits per Second
MCMD	Macro Command
MGSE	Mechanical Ground Support Equipment
MHS	Microwave Humidity Sounder
MIL	Military (standard)
N/A	Not Applicable
NIU	NOAA Instrument Interface Unit
OBDH	Onboard Data Handling System
OCM	Orbit Control Mode
OCOE	Over Check-Out Equipment
OMI	Ozone Monitoring Instrument
P/F	Platform
P/L	Payload
PA	Product Assurance
PCU	Power Conversion Unit
PLM	Payload Module

PMC	Payload Module Computer
PRT	Platinum Resistance Thermometers
RD	Reference Document
RF	Radio Frequency
RFC	Radio Frequency Compatibility
rms	root mean square
rpm	round revolutions per minute
RRM	Rate Reduction Mode
Rx	Receive ; Receiver
S&R	Search and Rescue
S/C	Spacecraft
S/L	Satellite
S/S	Subsystem
S/W	Software
SARP-3	Search and Rescue Processor
SARR	Search and Rescue Repeater
SEM-2	Space Environmental Monitor
SLA	S&R L-band Tx Antenna
SVM	Service Module
TB/TV	Thermal Balance / Thermal Vacuum
TBC	To be confirmed
TBD	Tobedefined
TC	Telecommand
TCU	Thermal Control Unit
TM	Telemetry
TT&C	Tracking, Telemetry, and Telecommand (LEOP, Emergency, and Stand-by)
Tx	Transmit, Transmitter
YSM	Yaw Steering Mode

TCU / GSE Temperature Control Unit

NDAPB

1.2. INSTRUMENT PRESENTATION

12.1. General

(For information only)

Instrument Name	*AMSU-A2* Advanced Microwave Sounding Unit - A2
Classification	Passive microwave instrument

The Advanced Microwave Sounding Unit AMSU-A is a multiple channel millimetre wave radiometer, consisting of two physically separate modules, AMSU-Al and AMSU-A2, each operating independently.

AMSU-A2 is a cross-track. line-scanned instrument designed to provide information on atmospheric water in all forms with the exception of small ice particles, that are transparent at microwave frequencies.

The AMSU-A system is designed to operate within its specifications under any Sun angle condition between 0 and 80 deg. The Sun angle is defined as the angle between the satellite to Sun line and the normal to the orbital plane.

133. Scientific Objectives

(For information only)

AMSU-A2 consists of the lowest frequencies of the AMSU-A system (K band channel 1 and Ka band channel 2), and the associated scanning, calibration, processing, and power control hardware and circuitry.

At each channel frequency, the antenna beamwidth is a constant 3.33 ± 10 % deg. (circular, at half power point). Thirty (30) contiguous resolution scenes are sampled in a stepped-scan fashion every eight (8) seconds.

AMSU-A2 radiometer characteristics are illustrated in Table 1.2.2/1.

	Centre Frequency (MHz)	Bandwidth (MHz)	centre Frequency Stability (MHz)	Temperature Sensitivity NEAT (K)	Calibration Accuracy (K)	Polarization	-3 dB stop Band (SB) f_c ± SB (MHz)
1	23800 (2 pass-bands)	270	± 10.0	0.3	2.0	V	10.0
2	31400 (2 pass-bands)	180	± 10.0	0.3	2.0	V	10.0

V : Polarization vector is parallel to scan plane at nadir

Table 1.2.2/1 : AMSU-A2 Channel Characteristics

1.23. Functional Description

The AMSU-A2 consists of one unit with the following modules. AMSU-A2 block diagram is illustrated in RD7.

1.23.1. Antenna / Drive / Calibration Subsystem

This subsystem consists of a conical corrugated horn-fed shrouded reflector, multiplexer, closed loop antenna scan drive assembly and closed path calibration assembly.

During an 8-second scan, the reflector observes 30 Earth scene sectors, the cosmic background (≈ 3 deg. K, cold calibration) and an internal warm calibration load (≈ 300 deg. K). The sampling interval is 3.3333 deg. and the overall swath, with respect to the nadir direction is ± 48.333 deg. (see Figure 1.2.3.1/1)

During rotation, the shroud shields the warm load from reflections and ensures maximum decoupling of the load to the antenna feed during calibration observations.

Complete end-to-end calibration is provided through-the-antenna, yielding maximum in-flight calibration accuracy. Knowledge and accuracy of warm calibration load brightness temperature is better than ± 0.2 deg. K.

Closed loop antenna scan drive provides beam pointing accuracy within ± 0.2 deg. Precise antenna beam position information is provided in the measurement / scientific data.

AMSU-A2 has one rotational scanning reflector with momentum compensation. A permanent magnetic motor detents prevent reflector motions during test, shipment and launch.

1.2.3.2. Receiver Subsystem

All AMSU-A channels are configured as total power super heterodyne receivers. Each channel provides RF to IF conversion, IF amplification, filtering of the frequency bands, detection and video amplification. Isolators precede the RF to IF conversion, preventing the possibility of local oscillator power leaking from the mixer, through the antenna and being reflected from the warm load back into the receiver.

Fundamentally pumped double balanced mixers are used for all channels, stabilized local oscillator for Channels 1-8 and 15 and a phase-locked oscillator for Channels 9-14. This configuration provides temperature sensitivity and high frequency stability. IF filters in the AMSU-A receiver provide greater. than 40 dB out-of-band rejection. SAW filters are used in the extremely narrow IF channels (Channels 11, 12, 13, 14). Tunnel diodes provide highly linear square-law detection.

1.233. Signal Processor Subsystem

This subsystem consists of a video processor, analog-to-digital converter, microprocessor, memory, FIFO, timing and control circuitry, DC/ DC converters and spacecraft interface circuitry. All channels of radiometric data, antenna position data, thermomeuic temperature of the warm calibration load and

critical components, and digital and analog housekeeping data are provided to the spacecraft telemetry system via spacecraft interface circuits.

133.4. Structural /Thermal Subsystem

A modularized structural configuration incorporating passive thermal control is used The mechanical / structural assembly is a box-type structure with aluminium panels to integrate the various subsystems. The enclosure and internal structure is designed to eliminate radio frequency interference. The AMSU-A utilizes second surface mirrors, second surface silvered Teflon tape, gold tape and multi-layer insulation for passive thermal control.

SCAN CYCLE	Description	Sequence Duration	Total
Earth Scan	30 steps of < 0.2 s (96.667 deg.)	5.965 s	5.965 s
Calibration	Slew 1 to Cold Cal. (35.0 deg. for Cal. #1)	0.205 s	6.170 s
	Space View Dwell	0.370 s	6.540 s
	Slew 2 to Warm Cal. (96.667 deg. from Cal. #1)	0.370 s	6.910 s
	Warm Load Dwell	0.370 s	7.280 s
	Slew 3 to Scan Position #1 (131.667 deg.)	0.460 s	7.740 s (< 8 s.)

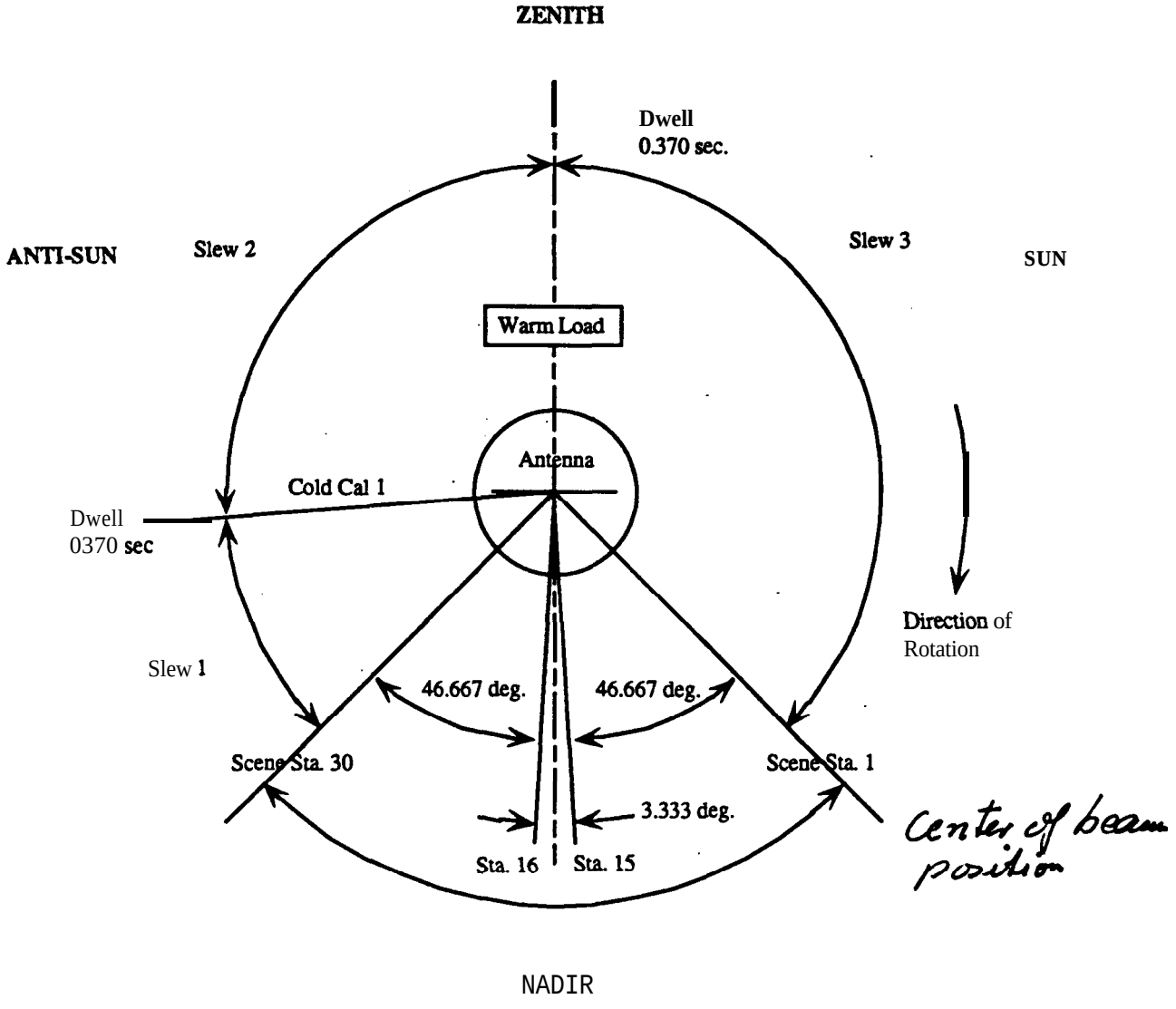

Table *1.2.3.1/1* : *AMSU-A2 Scan Cycle Description*

1.3. METOP SYSTEM OVERVIEW

13.1. Spacecraft Architecture Concept

(For information only)

The METOP mission consists of a geocentric, three-axis stabilized spacecraft placed into a Sun-synchronous orbit around the Earth. It is built around a primary structure consisting of :

- a service module (SVM), which provides all standard service elements
- an upper payload module (PLM) that accommodates the different instruments and corresponding electronic equipments.

The service module is a box-shaped structure, that interfaces with the launch vehicle at the bottom and with the payload module at the top.

The payload module provides the main supporting structure and external panels on which are mounted the payload instruments. It also provides internal accommodation for both the payload support systems and the instrument electronic units.

The METOP satellite in-orbit configuration is illustrated in Figures 1.3.1/1 and 1.3.1/2.

The AMSU-A2 interfaces with the following PLM units :

- the NOAA Instrument Interface Unit (NIU) provides all command and control interfaces to the AMSU-A2, i.e. configuration and mode switching (commands), command verification, housekeeping telemetry acquisition, and clock and time management. The NIU also acquires the measurement data from the instrument.
- the Power Conversion Unit (PCU) provides the AMSU-A2 with the regulated buses.
- the Thermal Control Unit (TCU) provides heater power supply when the instrument is off.

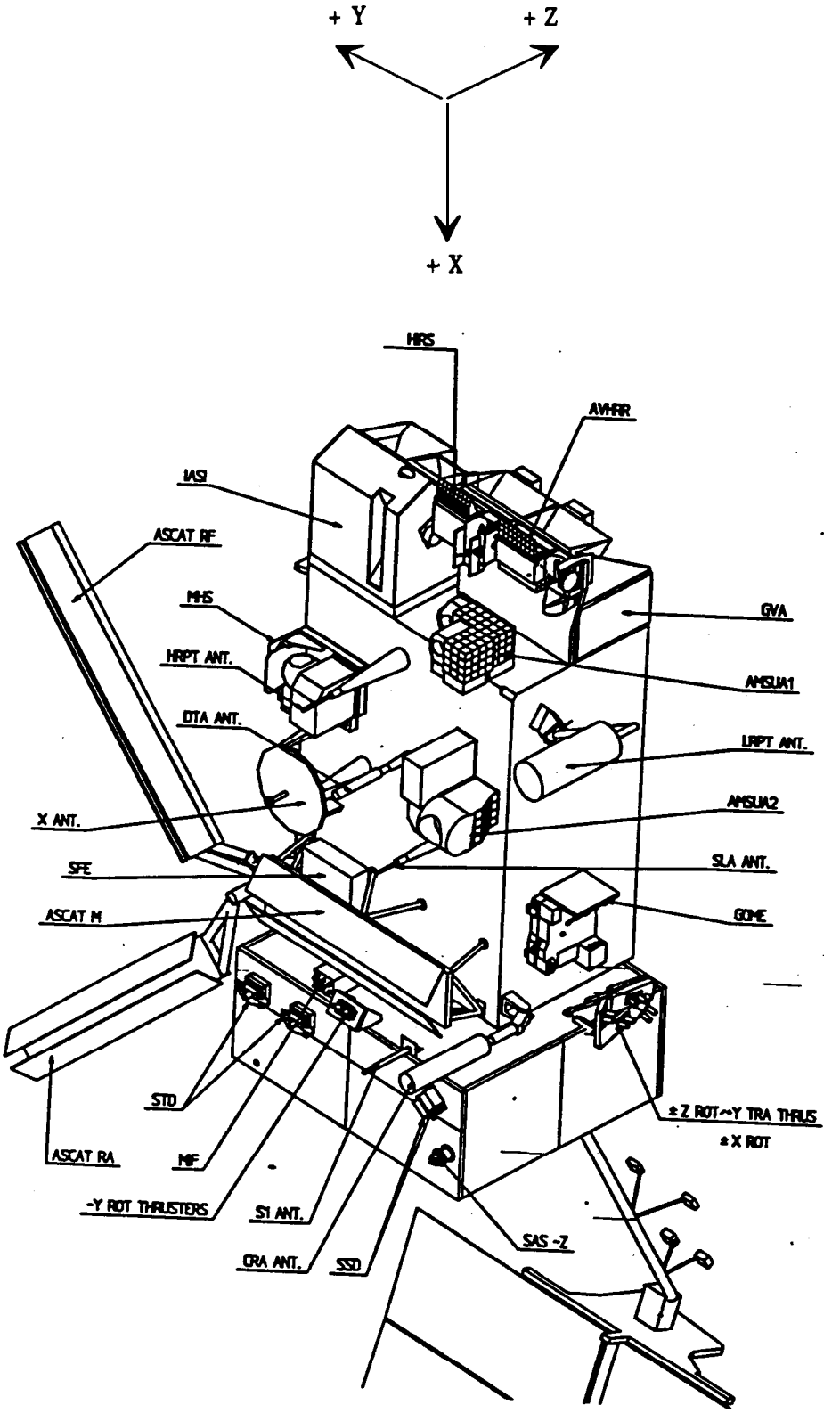

WARNING : MAY BE SUBJECTTO CHANGE

Figure 1.3.1/1 : METOP** Satellite **Overall Configuration (For Information Only)

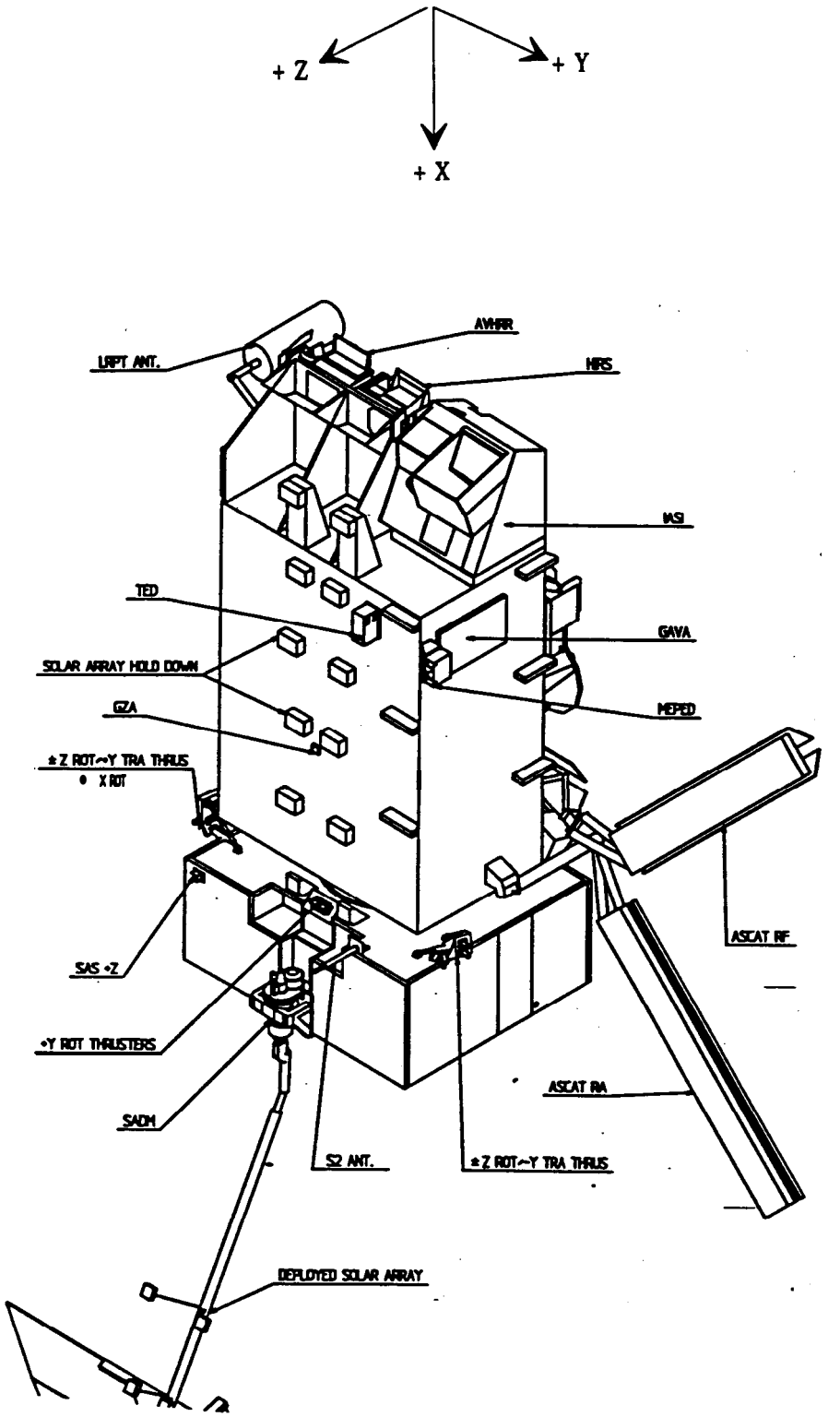

WARNING : MAY BE SUBJECT TO CHANGE

Figure 1.3.1/2 : Back View of the Satellite (For Information Only)

13.2. METOP Reference Frames

1.3.2.1. Satellite Reference Frame

The METOP satellite co-ordinate system is defined as follows (Spacecraft Absolute Reference, Frame $(O, X_s, Y_s, Z_s)\ F_s$):

- 0 is located within the spacecraft to launcher separation plane, at the centre of the attachment ring,
- The Xs-axis is perpendicular to this separation plane and oriented from the spacecraft towards the launch vehicle,
- The Zs-axis is the normal-out of the surface that carries the stowed solar array,
- The Ys-axis completes the right-handed orthogonal reference frame.

This reference is illustrated in Figure 1.3.2/1.

During normal payload operations, the (+X)-axis will be closely aligned to the orbit positive normal direction, the (-Y)-axis will be closely aligned to the METOP velocity vector and the (-Z)-axis will be closely aligned to the local downward direction (nadir)[1].

13.2.2. Instrument Reference Frame

The following is a requirement for the definition of the instrument reference frame. The frame specific to the AMSU-A2 is defined in § 2.1.3.2.

The instrument shall have a right handed orthogonal co-ordinate reference system $(X_{AMSU-A2}, Y_{AMSU-A2}, Z_{AMSU-A2})\ F_{AMSU-A2}$ and it shall be defined such that :

- the origin shall be physically located on an accessible, identifiable instrument exterior feature (e.g. the centre of one mounting hole, at the instrument baseplate level)
- the axes being ideally aligned with the Xs, Y_S, Z_S spacecraft axes, e.g. for instruments mounted on the platform nadir side, the datum plane which shall contain the $X_{AMSU-A2}, Y_{AMSU-A2}$ axes, is the plane containing the unit mounting lugs, and the $Z_{AMSU-A2}$ axis is perpendicular to this datum plane in the direction from the unit to the datum plane.

These axes shall be referred to on all drawings and any finite element description.

---

[1] For information, the correspondence between the METOP reference axes and TIROS reference axes is :
Xs METOP = Z TIROS S UN Ys METOP = Y TIROS –VEL Zs METOP = - X TIROS_NADIR

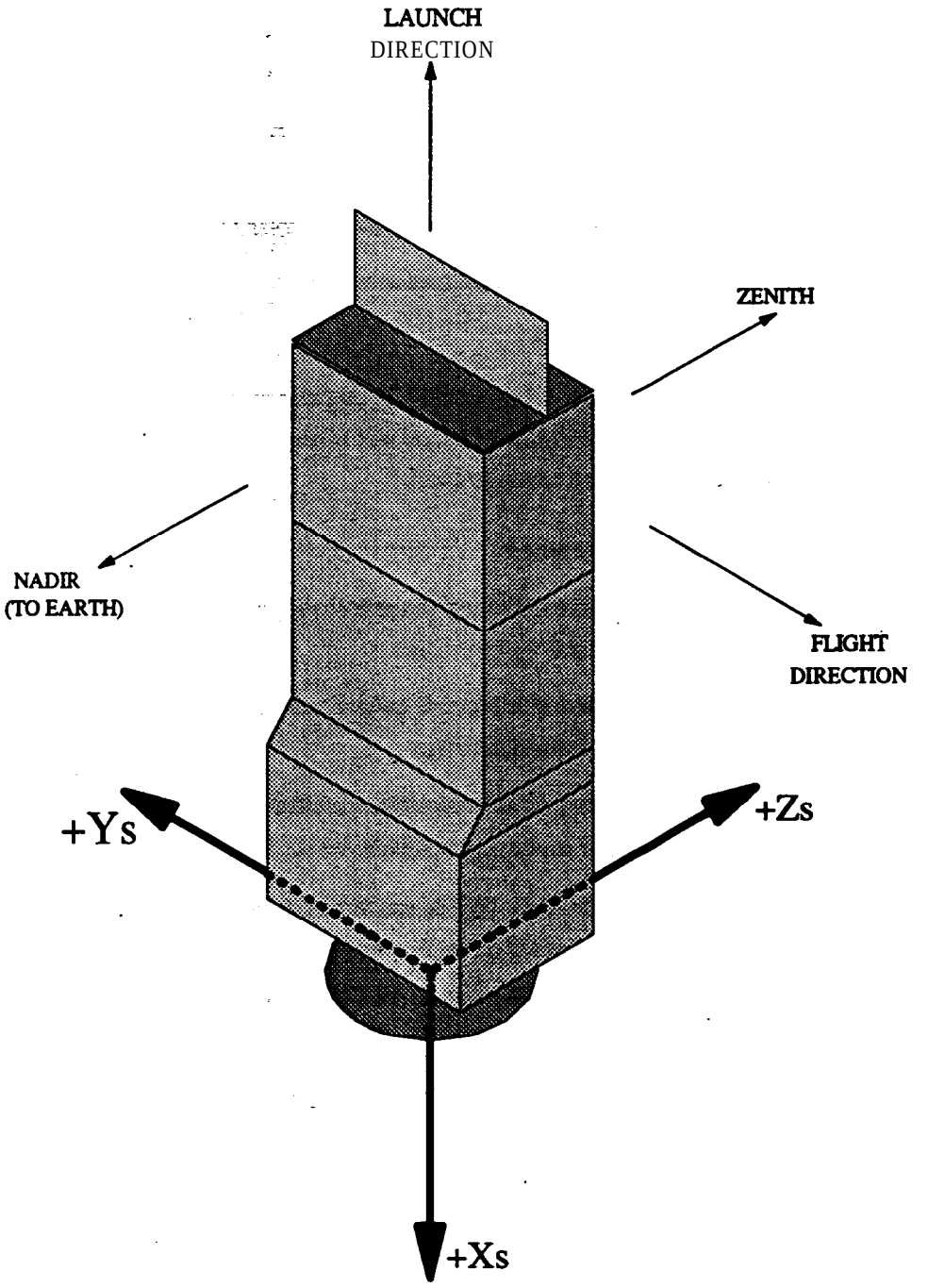

Figure 1.3.2/1 : Satellite Reference Frame

133. Orbital Parameters

13.3.1. Reference Orbit

METOP will be placed into the following reference orbit:

- Type:	Sun-synchronous
- Semi-major axis :	7197.939 km
- Repeat Cycle :	5 days (14 + 1/5 orbits per day)
- Local Solar Time :	09:30 A.M. descending node

The maximum solar aspect angle for this orbit is 60.5 deg. (the solar aspect angle is defined as the angle between the satellite to Sun line and the normal to the orbital plane).

133.2. Drift Orbit

For METOP-1, the previous orbit will be reached after a B-month (TBC_{MET}) drifting phase (dual launch), from an initial polar orbit (close to the Sun-synchronous one) with a local solar time around 10:00 AM. descending node.

The maximum solar aspect angle for this orbit is 67.0 deg. (the solar aspect angle is defined as the angle between the satellite to Sun line and the normal to the orbital plane).

For METOP-2, there is no such a drift orbit.

13.4. Satellite Mission Phases and Operations

13.4.1. Mission Phases

During its lifetime, the satellite is operated through the following mission phases :

- **Launch Phase**

  The proper launch phase begins at the instant of switching the power subsystem to on-board batteries before lift-off and ends at satellite/launch vehicle separation.

- Acquisition Phase

  This phase starts at the end of the launch phase and ends once the satellite has acquired its operational attitude and orbit with its appendages deployed. An initial acquisition sequence leading to a system secured state, is followed by a final acquisition period.

- **Commissioning Phase**

  This phase starts once the attitude and orbit have been acquired and covers the time that subsystems and instruments are checked out. It ends when the payload is operational for the nominal orbit.

For METOP-1, it starts when the satellite is still drifting to achieve the nominal local solar time of 09:30.

- Routine / Operational Phase

This phase starts at the end of the commissioning phase and covers the time when the instruments are operational and the times when orbit maintenance manoeuvres are performed.

1.3.4.2. Satellite Operational Modes

This section describes the satellite operational modes and the corresponding pointing performances.

1.3.4.2.1. Nominal Operational Mode

The nominal operational mode for METOP SVM is the Yaw Steering Mode (YSM[2]). During this mode, the PLM is in its Operable Mode : the instruments can be nominally operated through their measurement, heater, calibration... modes, and measurement data are transmitted to the ground

The characteristics of the satellite nominal operational mode are the following :

Nominal Mode (YSM)			
Commanded Pointing	-Zs	Pointing towards nadir	
	-Ys	Pointing towards the velocity	
Pointing Performances (According to ESA Summation Rules)			
Absolute Pointing Error AVHRR/3 Line of Sight (TBC_{MET})	X axis ± 0.17 deg.	Yaxis ± 0.17 deg.	Z axis ± 0.22 deg.
Pointing Knowledge All Instrument Interface Reference Frames	X axis ± 0.17 deg.	Yaxis ± 0.17 deg.	zaxis ± 0.22 deg.
Absolute Rate Error (Max, 0-4 Hz)	X, Y, Z axes ± 0.005 deg /s TBC_{MET}		

1.3.4.2.2. Orbit Control Modes

The previous performances are not guaranteed during large amplitude orbit control manoeuvres for altitude maintenance or inclination maintenance. Those are performed in SVM Orbit Control Mode (OCM) or Fine Control Mode (FCM).

---

2 During the Yaw Steering Mode (YSM), the satellite Z axis (yaw) is steered according to sinusoidal function over the orbit with au amplitude of about 4 deg.

During those mode-s, the PLM is still operable and the instrument nominal operations are not stopped, even if the generated measurement data may be corrupted This is not true for the initial orbit corrections, for which the PLM and the instrument status are in LEOP / Off Modes.

Altitude Maintenance

For altitude maintenance during the routine phase (in-plane manoeuvres), the commanded attitude is similar to the one in the nominal operating modes (YSM or local orbital reference frame), but with different pointing performances :

Orbit Control Mode : **Altitude Maintenance**		
Commanded Pointing	-Zs	Pointing towards nadir
	-Ys	Pointing towards the velocity
Pointing Performances		
Absolute Pointing Error All Instrument Interface Reference Frames	**X, Y, Z axes** ± 2 deg. TBC_{MET}	

Inclination Maintenance

For inclination maintenance during the routine phase (out-of-plane manoeuvres), the satellite body is rotated by 90 deg. ± 20 deg. around the yaw axis (Z-axis), and by ± 20 deg. around the X-axis (local orbital reference frame), and a thrust normal to the orbit plane is performed. The rotation direction can be both clockwise and anti-clockwise and occurs around a node of the orbit.

The overall manoeuvre (rotation, thrust and back rotation) is performed during the eclipse'phase of the orbit

During these manoeuvres, the nominal mode is stopped for typ. 4 orbits, but the duration from the beginning of first rotation to the end of back rotation is less than 1800 sec.

The pointing performances are then :

Orbit Control Mode : Inclination Maintenance Pointing Performances	
Absolute **Pointing Error** All Instrument Interface Reference Frames	**X, Y. Z axes** ± 2 deg. TBC_{MET}

1.3.4.2.3. Acquisition Modes

The acquisition modes encompass all actions leading to a stabilized Earth attitude, including deployment of all major appendages.

The corresponding SVM modes are the Rate Reduction Mode (RRM), the Coarse Acquisition Mode (CAM), the Fme Acquisition Modes (FAM1, FAM2 and FAM3) and the Fme Pointing Mode (FPM).

During these modes, the PLM is in the Lift-Off Mode and then LEOP Mode. In general, all instruments are switched off.

Once the satellite attitude is stabilized, the pointing performances are the following (local orbital reference frame):

Acquisition Modes			
Commanded Pointing	-Zs	Pointing towards nadir	
	-Ys	Pointing towards the velocity	
Pointing Performances			
Absolute Pointing Error All Instrument Interface Reference Frames	X axis ± 5.0 deg TBC_{MET}	Yaxis ± 5.0 deg. TBC_{MET}	zaxis ± 7.5 deg. TBC_{MET}
Absolute Rate Error (Max, 0-4 Hz)	X, Y, Z axes ± 0.05 deg./s TBC_{MET}		

Note : The mode sequence up to a stabilized satellite attitude may last up to 3500 sec.

1.3.4.2.4. Contingency Cases

In the event of detection of a satellite failure, several back up modes exist at PLM and / or SVM levels.

PLM Failure Cases

For failure at PLM level only, the corresponding PLM modes are the PLM Stand-By Mode, the PLM Fix Mode and the PLM Safe Mode, depending on the failure. All instruments are switched off.

The SVM is not affected and the nominal attitude is maintained (see § 1.3.4.2.1.)

SVM Failure Cases

For failure at SVM level, the PLM is forced to PLM Stand-By Mode, PLM Fix Mode or PLM Safe Mode, depending on the failure, and all instruments are switched off.

The SVM enters several modes that lead to a stabilized Earth pointing attitude. From an operational point of view, those modes are similar to the very first attitude acquisition that follows the separation from the launch vehicle, but with deployed appendages.

Once the satellite attitude is stabilized, the pointing performances are the same as those described in § 1.3.4.2.3. with similar delay performances up to a stabilized satellite attitude.

1.3.4.2.5. Safe Mode (Sun Pointing)

In addition. to the previous back-up modes, an ultimate safety level is implemented on METOP. This so-called Safe Mode performs the minimal functions for satellite survival by maintaining a Sun-pointed attitude. During the Safe Mode, the PLM is in the PLM Safe Mode and all instruments are switched off.

The characteristics of such a mode are :

Safe Mode			
Commanded Pointing	+Zs	Pointing towards the Sun	
	The attitude is not controlled but remains within the limits specified below		
Pointing Performances			
Absolute Pointing Error	sun-lit phases	xaxis ± 15 deg.	Yaxis ± 15 deg.
All Instrument Interface Reference Frames	shadowedphases	xaxis ± 20 deg.	Yaxis ± 20 deg.
	Delay between eclipse and Sun-lit performances : 500 s		
Absolute Rate Error (Max, 0-4 Hz)	The rate about any axis is controlled between 0 and ±0.1 deg./s. TBC_{MET} There is nocommanded spin.[3]		

The transients to reach this final attitude may last up to one orbit, Transitions to this final attitude are undetermined.

[3] As a consequence, the (-Xs) side of the satellite, that nominally faces the cold space, may continuously face the Earth albedo during the safe mode.

1.4. INSTRUMENT OPERATIONAL MODES

1.4.1. Operational Constraints

To assure proper in-orbit operations of the AMSU-A2, certain practices are to be observed during the mission phases (see § 1.3.4.1.). These are :

a) On the ground, the AMSU-A2 initial configuration is the Module Totally Off state, i.e. the antenna is at the warm calibration position, power to the scanner and to the compensation motor is in the OFF state, and power to the + 28 VDC Main Bus and Pulse Load Bus is in the OFF state.

b) The instrument survival thermal control 'ON', which can be initiated by a dedicated command to the AMSU-A2, will not be used on METOP. Instead the instrument internal safety heaters will be used. The TCU shall provide power during launch and in the OFF mode.

c) The AMSU-A2 can be operated, within the constraints hereafter defined, at any time during the drift phases of the orbit.

d) The nominal operating mode for AMSU-A2 is the Measurement mode. There is no specific requirement from the PLM during this mode.

e) In case of PLM failure, tbe clock / signal and power (10 & 28 V) may not be available at the instrument interfaces for a maximum duration of 36 hours.

f) The measurement data acquisition of Digital A Data from AMSU-A2 may be corrupted in case of spacecraft failure (i.e. Data Enable and Clock interrupted and Sync. pulses present). In this case, the instrument shall be reset by ground command i.e. by powering down to Off Mode and following powering up the instrument to Measurement Mode.

Further operational requirements are defined within the command sequence from § 1.5.

1.4.2. Instrument Mode Overview

1.4.2.1. AMSU-A2 Off Mode

This mode corresponds to the STAND-BY / SAFE STATE configuration of the instrument.

During AMSU-A2 Off Mode, the instrument is unpowered with the exception of the survival power for survival thermal control of the RF Shelf A2.

The antenna is parked at the warm calibration (stow) position. No service (telemetry, monitoring...) will be performed by the METOP satellite.

This Off Mode for AMSU-A2 is used :

- during the METOP pre-launch, launch and acquisition phases
- during the METOP contingency cases. (see § 1.3.4.2.4).
- during the METOP safe mode (see § 1.3.4.2.5.).

The Switched TLM bus is available at the instrument interfaces only during the PLM Stand-By and Operable modes. The temperatures will be monitored only during these PLM modes.

All interface power buses and signals shall be available at the interfaces of the AMSU-A2 to exit this mode.

1.432. AMSU-A2 Measurement Mode

This mode is defined as the normal operating mode of the AMSU-A2, with the instrument generating measurement data. In this mode, each data cycle includes an automatic calibration sequence using both warm calibration target and cold space view.

The AMSU-A2 has four beam positions selectable by commands, to provide a cold (space look) calibration position. During nominal Measurement Mode turn-on, the primary cold calibration position is selected.

1.433. AMSU-A2 Unique Mode

The AMSU-A2 can be operated in three unique operation modes for long-term calibration purposes Those are :

- warm calibration unique operation
- cold calibration unique operation
- nadir position unique operation

To go from one unique operation mode to another unique operation mode, a sequence through full scan (measurement) mode is required.

There is no constraint on the duration of this mode.

1.4.3. Cross Reference Between instrument and PLM Modes

Phases	PLM	AMSU-A2	Comments
Launch and Acquisition Phases	Lift-Off Mode LEOP Mode	Off Mode	
Re-Operational Phase	Stand-By	Off Mode	
Operational Phase	Operable	Off Mode Measurement Mode Unique Mode	
Orbit Control	Operable	Any	During Inclination Manoeuvres, the AMSU-A2 is triggered to Off Mode or Warm Calibration Unique Mode
Manoeuvres	Stand-By	Off Mode	
Contingency Cases	Stand-By Fix Safe	Off Mode	

1.5. INSTRUMENT LAUNCH AND IN-&BIT OPERATIONS

The AMSU-A2 operational sequences, as used on METOP, are illustrated in Figure 1.5/1.

1.5.1. General

Instrument operational constraints are presented in § 1.4.1.

The minimum time between two consecutive is specified in § 3.2.2. (i.e. 18.s.), except as noted below.

AMSU-A2 telecommands are described in § 3.2.2.

The acknowledgement of the commands by the instrument is done with Digital B telemetry points as described in § 3.2.3.2 and § 3.2.4. When no Digital B telemetry point is available, the acknowledgement is done with the instrument Analog Housekeeping telemetry on the ground.

Instrument operations during tests are described in § 5.

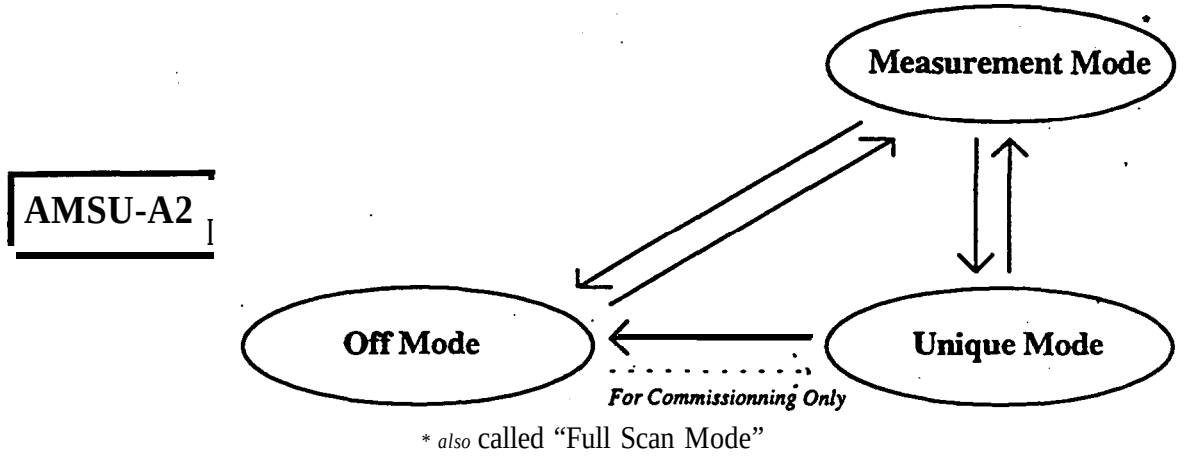

Figure I.511 : AMSU-A2 Mode Operation Sequence Used on METOP

1.52. Instrument Sequences to AMSU-A2 Off Mode

1.5.2.1. Nominal Sequence to Off Mode

The instrument switch-off sequence from any mode into Off Mode shall be as following :

1) Send MODULE TOTALLY OFF command to OFF
2) Send SURVIVAL HEATER POWER OFF

The previous command sequence shall be executed prior to the launch.

1.5.2.2. Emergency Sequence to AMSU-A2 Off Mode

In case of emergency (including depointing), the following sequence shall be issued by the NIU to the instrument, to switch down the AMSU-A2 to Off Mode (protected configuration):

1) Send PULL SCAN command to NO ACTION
2) Send WARM CAL command to ON
3) Send MODULE POWER DISCONNECT
4) Delay 2 sec.

This emergency switch-off sequence is completed within 38 s. (c 50 s).

No power (except for survival thermal control) and no interface signal will be available at the interfaces.

Note : Handling of measurement data may be switched off immediately after emergency signal reception by the NIU.

1.533. Recovery From Emergency Switch-Off

The following procedure shall be executed to recover the AMSU-A2 after an emergency switch-off to Off Mode, prior to trigger the Measurement Mode :

1) Send MODULE TOTALLY OFF command to NOT OFF
2) Send MODULE TOTALLY OFF command to OFF

1.53. Instrument Sequence to and During AMSU-A2 Measurement Mode

153.1. Switch-on From Off Mode to Measurement Mode

Before leaving the Off mode, the following minimum temperature requirements shall be met :

Telemetry Point	Minimum Temperature
RF Shelf A2	≥ -22 deg. C
Scan Motor A2	≥ -35 deg. c
Compensator Motor	≥ -35 deg. c

This is determined by the METOP Ground Segment.

The instrument switch-on sequence from AMSU-A2 Off Mode into AMSU-A2 Measurement Mode shall be as followhlg :

1) Send MODULE TOTALLY OFF command to NOT OFF
2) Send MODULE POWER CONNECT command
3) Send SURVIVAL HEATER POWER OFF command
4) Send COLD CAL POSITION MSB command to 0
5) Send COLD CAL POSITION LSB command to 0
6) Send FULL SCAN command to ON
7) Send SCANNER A2 POWER command to ON
8) Send COMPENSATION MOTOR POWER command to ON

1.5.3.2. Switch-on From Unique Mode to Measurement Mode

The instrument switch-on sequence from AMSU-A2 Unique Mode into AMSU-A2 Measurement Mode shall be as following :

1) FULL SCAN command to ON
2) WARM CAL command to NO ACTION
3) COLD CAL command to NO ACTION
4) NADIR command to NO ACTION

1.5533. Sequences During AMSU-A2 Measurement Mode

Selection of Cold Calibration Position

To select any of the four cold calibration positions, the following sequence shall be executed in AMSU-A2 Measurement Mode. This command sequence can be sent to the AMSU-A2 at any time of the scan cycle.

1) Send FULL SCAN command to NO ACTION
2) Send WARM CAL command to NO ACTION
3) Send COLD CAL command to ON

For Position 1 (6.6670 deg. from -X axis)

4) Send COLD CAL POSITION MSB command to 0
5) Send COLD CAL POSITION LSB command to 0

For Position 2 (8.3330 deg. from -X axis)

4) Send COLD CAL POSITION MSB command to 0
5) Send COLD CAL POSITION LSB command to 1

For Position 3 (9.9990 deg. from -X axis)

4) Send COLD CAL POSITION MSB command to 1
5) Send COLD CAL POSITION LSB command to 0

For Position 4 (13.3320 deg. from -X axis)

4) Send COLD CAL POSITION MSB command to 1
5) Send COLD CAL POSITION LSB command to 1

End of Sequence

6) Send COLD CAL command to NO ACTION
7) Send FULL SCAN command to ON

15.4. Instrument Sequence to AMSU-A2 Unique Mode

The AMSU-A2 Unique Modes can be triggered at any time during the nominal Measurement Mode, with the following sequence :

1.5.4.1. Warm Calibration Unique Mode

1) Send FULL SCAN command to NO ACTION
2) Send WARM CAL command to ON

1.5.4.2. Cold Calibration Unique Mode

1) Send FULL SCAN command to NO ACTION
2) Send WARM CAL command to NO ACTION
3) Send COLD CAL command to ON

15.43. Nadir Position Unique Mode

1) Send FULL SCAN command to NO ACTION
2) Send WARM CAL command to NO ACTION
3) Send COLD CAL command to NO ACTION
4) Send NADIR command to ON.

2. MECHANICAL AND THERMAL INTERFACE DESCRIPTION

BLANK

2.1. GENERAL

2.1.1. Interface Definition

The interface definition for the instrument is the following :

Instrument	Satellite
Mechanical	
Instrument unit Alignment device in the form of an optical cube permanently mounted on the instrument and aligned by the Instrument Supplier All instrument covers (including aperture cover and connector cover) Alignment (dowel) pins are part of instrument	Attachment bolts Head bold washers (flat washers) Adjustment shims Ground strap
Thermal	
Unit thermal control hardware, including : blankets, operational modeintemal temp. sensors Survival heaters and related thermostats for the thermal control of the instrument (see note). Thermal washers 1 (fibreglass washers G-10CR,) stand off feet ~~Thermal washers 2~~ (fibreglass insulators G-10CR) permanent part of instrument	Additional thermal isolation stand-off (TBD_{MET}) Thermal blankets attached to the METOP structure

Note : Safety heaters / survival heaters for METOP use : see § 2.3.4.5.

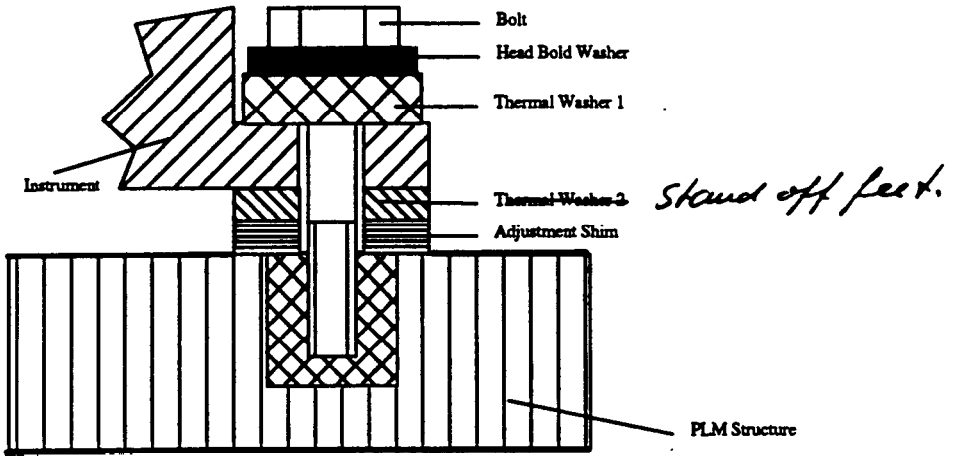

Figure 2.1.1/1 : Definition of Attachment Hardware (Generic Schematics)

2.1.2. Module / Unit Identification

The Part Number and Identification Code of the AMSU-A2 instrument are :

1)	Equipment Name :	Advanced Microwave Sounding Unit - A2
2)	Purchase Order Or Contract Number :	NAS5-323 14
3)	Manufacturer Name :	Gencorp Aerojet
4)	Part No :	EM : NIA FM : TBD_{AM2}
5)	ID Code :	N/A import ID from 3.3.3.5/2 (delete only dashed no.)
6)	METOP ID Code	N/A

The location of the labels giving these Part Numbers and Identification Codes are defined in the Mechanical Interface Control Drawing (See § 2.1.4.).

2.13. Reference Frames

2.13.1. Satellite Reference Frame

See § 1.3.2.1.

2.13.2. Instrument Reference Frame

The reference point for all mechanical and thermal data is the centre of the alignment pin (item number 13) as shown in the Interface Control Drawings (at the interface to the PLM structure, see § 2.1.4).

The AMSU-A2 Instrument Interface Reference Frame, $F_{AMSU-A2}$, with the origin being at the reference point, is as defined in the Mechanical Interface Control Drawings (see § 2.1.4.). The directions of the $F_{AMSU-A2}$ axes are the same as the Spacecraft Reference Frame F_S.

2.1.4. interface Drawings

2.1.4.1. Mechanical Interface Drawings

The AMSU-A2 instrument configuration and mechanical interfaces are illustrated in the following interface drawings :

- AMSU-A2 Instrument Interfaces, Ref. MMS-106614-F-DD-1/3-03
- AMSU-A2 Instrument Connector Panel, Ref. MMS-106614-F-DD-3/3-02
- AMSU-A2 Instrument Accessibility, Ref. MMS-110208-L-DD-1/1-01

2.1.4.2. Thermal Interface Drawing

The AMSU-A2 instrument thermal interfaces are illustrated in the following interface drawing :

- AMSU-A2 Instrument Thermal Interfaces, Ref. MMS-106627-Y-DD-1/1-Q2

2.1.4.3. Field of View Interface Drawing

The AMSU-A2 instrument field of view is illustrated in the following interface drawing :

- AMSU-A2 Instrument Field of View, Ref. MMS-106614-F-DD-2/3-02

2.2. MECHANICAL -INTERFACE DESCRIPTION

2.2.1. Physical Envelope

AMSU-A2 consists of a single fully integrated unit.

The external unit dimensions in botb launch and in-orbit modes, including thermal blankets, studs, mounting lug and connector envelopes, shallbeto atoleranceof ±1 mm. These are:

AMSU-A2 Configuration	Y axis (Velocity)	X axis	Z axis (Nadir)
Total Envelope	627 mm	749 mm	697 mm

'The overall dimensions are defined without thermal stand-offs, which are METOP specific, and without connector saver.

AMSU-A2 does not have any deployable part.

2.22. Field of View Definition

The accommodation on METOP provides AMSU-A2 witb the following unobstructed Field of View (FoV, see also interface drawing § 2.1.4).

The AMSU-A2 boresight is defined as the nadir direction The instrument field of view definition is :

- vertex : the origin of the field of view is quoted on the interface drawing (§ 2.1.4.).

- Spacecraft provision :

- Cross-track scan plane :

  from 86.9 / 90.4 deg. anti-Sunwards to 5 1.9 / 55.4 deg. Sunwards.

  This is tbe general envelope for :

  3.5 / 7 deg. margin + 35 deg. anti-Sun calibration + 48.33 deg. anti-Sunwards + 48.33 deg. Sunwards + 3.5 / 7 deg. margin

  Note : the cold space look field of view is an envelop for 4 cold calibration positions.

- Along-track plane : ± 3.5 / 7 deg.

The requirements for the instrument thermal radiators are specified in the Thermal Interface Description sections of this document (§ 2.3).

2.2.3. Mass Properties

The mass properties of the AMSU-A2 instrument are given in the following table. The co-ordinate system used is the Instrument Interface Reference Frame, $F_{AMSU-A2}$.

233.1. Mass and Centre of Mass Location

The AMSU-A2 centre of gravity location has been measured without the attachment bolts / washers or thermal stand-offs, Instrument to METOP PLM interface connectors and thermal blankets are included.

Module Nnlt	Specified Mass	Centre of Mass Location With Respect to the Reference Point (± 05 mm)		
		$X_{AMSU-A2}$ (Sun)	$Y_{AMSU-A2}$ (Anti-velocity)	$Z_{AMSU-A2}$ (Zenith)
AMSU-A2	50.0 kg	-243.1 mm	+38.2 mm	-292.1 mm

AMSU-A2 Mass Properties

The AMSU-A2 instrument shall not exceed the above specified mass for the METOP mission.

The AMSU-A2 mass shall be measured at ± 0.1%.

The AMSU-A2 basic (best estimate) mass is : 48.94 kg (for information only).

2.23.2. Moments of Inertia

The AMSU-A2 moments of inertia about the centre of mass of the instrument are as follows. These numbers are with the motors not operating.

Module Nnit	Moments of Inertia (kg.m²) ± 5%					
	I_{XX}	I_{YY}	I_{ZZ}	I_{XY}	I_{XZ}	I_{YZ}
AMSU-A2	3.002	3.172	3.302	-1.011	-0.126	0.319

AMSU-A2 Moments of Inertia

Note : The moments of inertia are defined as follows :

$$\begin{bmatrix} I_{xx} & -I_{xy} & -I_{xz} \\ -I_{xy} & I_{yy} & -I_{yz} \\ -I_{xz} & -I_{yz} & I_{zz} \end{bmatrix} \quad \text{with :} \quad \begin{aligned} I_{xx} &= \int (y^2+z^2)dm \\ I_{yy} &= \int (x^2+z^2)dm \\ I_{zz} &= \int (x^2+y^2)dm \end{aligned} \quad \text{and} \quad \begin{aligned} I_{xy} &= \int xydm \\ I_{xz} &= \int xzdm \\ I_{yz} &= \int yzdm \end{aligned}$$

2.2.4. Instrument Mounting Attachments

2.2.4.1. Mounting Description

The AMSU-A2 is mounted using the instrument-supplied fibreglass washers (1 & 2) and alignment pins, and satellite-supplied multiple bolts through the instrument baseplate, head bold washers and adjustment shims. Where required METOP will provide additional thermal standoffs.

The following table describes the instrument mounting hardware :

Module / Unit AMSU-A2	Bolt Size	Instr. Mounting Hole Diameter (mm)	Length (mm)	Torque (Nm)	Quantity
Instrument Unit	M6 (TBC_{MET})	7.11 / 7.28. CBORE 15.08 / 15.09	TBD_{MET}	TBD_{MET}	11
Alignment Pins	N/A	15.14 / 15.15	19.05	N/A	2

Tolerances are specified in the interface drawings (see § 21.4.).

2.2.4.2. Mounting Hole Position and Reference Point (Hole)

The definition of the mounting holes and the instrument Reference Pin for AMSU-A2 is given in the Mechanical Interface Control Drawing (see § 2.1.4.).

2.2.43. Mounting Surface Characteristics

Instrument Side	Surface Coplanarity	Within 0.13 mm
	Surface roughness of attachment face	N/A
	Total area of the mounting surface	Contact only through thermal stand-offs
METOP Side	Surface Flatness	LessthanO.l mm in 100 mm
	Surface roughness of attachment face	≤ 1.6 microns R.A
	Shimming Accuracy for Flatness	Within 0.0254 mm

2.2.4.4. Instrument Location

The mounting surface is on the -Z (nadir) face of the PLM structure.

2.2.4.5. Materials at Interfaces

Instrument Side	AMSU-A2 Baseplate	Aluminium alloy with G10 insert washer with Titanium Alignment Pins
	Mounting Area Finish	Alodyne 600
METOP Side	PLM Structure	Aluminium skin with a honeycomb core
	Attachment Bolts and Washers	Titanium bolts with stainless steel washers
	Thermal isolation stand-off material	TBD_{MET}

2.2.4.6. Thermo-Elastic Interface

The thermo-elastic characteristics shall be defined in a reduced mechanical interface model as defined in § 2.2.8.5.

2.2.4.7. Grounding Provisions

The location of the grounding point is bolt position # 3 on the instrument, and is defined in the Mechanical Interface Control Drawing (see § 2.1.4.).

2.2.5. Accessibility

Accessibility to specific parts of the instrument shall be guaranteed, when accommodated on METOP. The faces on which specific parts are accommodated are defined in the following :

AMSU-A2 *This table indicates the viewing direction from' the instrument.*			
	Item	**Instrument Side**	**Access Required**
1	Electrical connectors	+Y	During AIT activities
2	Connector Savers	+Y	During AIT activities
3	Connector dust caps	+Y	When the instrument is not in use.
4	Test connector	+Y	During all AIT activities
5	Alignment cube (2)	+Y / +X	During AIT alignment activities
6	Reflector cover *(1)*	- x - z	During all AIT activities, except TB/TV, vibration and EMC (TBC)
7	Purging Interface	None	-

(1) The covers are such that the antenna can rotate with the covers in place.

(2) Optical cube taped ~~when not in use~~. before launch only.

The detailed position of these items are indicated on the Mechanical Interface Control Drawings (§ 2.1.4.).

2.2.6. On-Ground Alignment

2.2.6.1. Alignment Method

The primary co-registration of AMSU-A2 interface is with respect to AVHRR/3 interface. The instrument provides no means of alignment adjustment. AMSU-A2 is attached to the METOP PLM structure with a placement accuracy off 0.3 degrees. No mechanical means of -adjustment for rotation is foreseen about any axis for initial ground co-registration. The instrument is accommodated accepting the X, Y and Z axis positions. Measurement of the alignment of AMSU-A2, with respect to the spacecraft reference axis, is by use of the instrument provided optical reference cube mounted on the instrumentandis measured to an accuracy of ± 0.006 degrees. The co-alignment between AMSU-A2 and AVHRR/3 is measured to an accuracy off 0.009 degrees.

The cross references between the instrument. boresight axis and its optical alignment surface and between the optical alignment surface and the instrument mounting surface are established at instrument level and reported in the Acceptance Data Package.

2.2.6.2. Alignment Hardware

The position of the instrument optical reference cube is given in the Mechanical Interface Control Drawing (§ 2.1.4).

AMSU-A2 Alignment Cube	
Description	Two orthogonal alignment surfaces
Alignment Surface Viewing Direction	Satellite +Y and -Z sides.
Surface Size (for one surface)	> 645 mm²
Surface Characteristics	Polished flat to within λ/4 where λ = Sodium Yellow
Surface Orthogonality	± 10 arcseconds

The cube shall be taped ~~for all periods when the cube is not in use~~. only before launch

This cube is not removable.

2.2.6.3. Alignment Tolerances for Instrument Interfaces

The following table gives the alignment tolerances of **AMSU-A2:**

TBC AMSU TBC AMSU TBC AMSU

METOP Axes (2 Sigma Values)	X **(Deg.)**	Y **(Deg.)**	Z **(Deg.)**	**Respon-** sible
Absolute alignment tolerance *between* *the* instrument line of sight *and* *the* optical alignment surface.	± 0.25	± 0.25	Lo.25	AMSU-A2
Change of alignment tolerance after environmental test *between* *the* instrument line of sight *and* *the* optical alignment surface	± 0.05	± 0.05	± 0.05,	AMSU-A2
Absolute alignment tolerance between the instrument line of sight *and* its mounting surface	* ± 0.20	* ± 0.20	-	AMSU-A2
Change of alignment tolerance after environmental test *between* the instrument line of sight *and* its mounting surface	* ± 0.05	* ± 0.05	-	AMSU-A2
Absolute alignment tolerance *between* *the* instrument line of sight *and* *the* mounting surface hole pattern	*		* ± 0.20	AMSU-A2

* Budged inputs for Metop

2.2.7. Deployment Mechanisms and **Pyros**

2.2.7.1. Deployment Mechanisms

Not applicable for **AMSU-A2.**

2.2.7.2. **Pyros**

Not applicable for AMSU-A2.

2.2.8. Interface Structural Design

Flight Limits Loads are enveloping the loads, including launch, manufacturing, handling, transportation and ground testing (excluding qualification testing).

Qualification Limit Loads add a qualification factor (1.25 for METOP) on top of the Flight Limit Loads.

2.2.8.1. AMSU-A2 Limit Loads

The AMSU-A2 is tested to the following limit loads applied at the instrument interface attachment points :

A

	Load Axis		
	X	Y	Z
Maximum Flight Limit Load	13.2 g	13.2 g	13.2 g
Qualification Limit Loads	16.5 g	16.5 g	16.5 g

2.2.8.2. METOP Induced Limit Loads

B Preliminary analysis indicate tlie following maximum predicted limit loads applied to the AMSU-A2 during the METOP mission :

Maximum Flight Limit Load	18.6 g	Applied at unlt centre of gravity in any spatial direction
Qualification Limit Loads	23.3 g	

Figure 2.2.8.2/1 : METOP Induced Loads for AMSU-A2

B These levels will be revisited following future structural analysis and the METOP structural model test campaign.

2.2.8.3. 1-g Interface Loads

The AMSU-A2 l-g interface loads, calculated at each interface point (zero preload), with the instrument hard-mounted configuration are presented in the following tables :

AMSU-A2 Hard Mounted **Interface Loads**
Based on 1 g Applied in X

Attachment Id.		Shear Force (in-plane) (N)		Axial Force (out-of-plane) (N)	Moment (N.mm)
		X axis	Y axis	Z axis	
1	-	-	-	124	0
2	-	-	-	40	0
3	-	-	-	101	0
4	-	-	-	-136	0
5	-	-	-	-36	0
6	-	-	-	-17	0
7	-	-	-	5	0
8	-	-	-	40	0
9	-	-	-	-115	0
10	-	-	-	-103	0
11	-	-	-	99	0
12	Alignment Pin	214	77	-	0
13	Alignment Pin	264	-77	-	0

AMSU-A2 Hard Mounted Interface Loads
Based on 1 g Applied in Y

Attachment Id.		Shear Force (in-plane) (N)		Axial Force (out-of-plane) (N)	Moment (N.mm)
		X axis	Y axis	Z axis	
1	-	-	-	185	0
2	-	-	-	-31	0
3	-	-	-	-120	0
4	-	-	-	-167	0
5	-	-	-	-50	0
6	-	-	-	-25	0
7	-	-	-	14	0
8	-	-	-	23	0
9	-	-	-	-107	0
10	-	-	-	106	0
11	-	-	-	182	0
12	Alignment Pin	-52	311	-	0
13	Alignment Pin	52	168	-	0

AMSU-A2 Hard Mounted Interface Loads
Based on 1 g Applied in Z

Attachment Id.		Shear Force (in-plane) (N)		Axial Force (out-of-plane) (N)	Moment (N.mm)
		X axis	Y axis	Z axis	
1	-	-	-	36	0
2	-	-	-	37	0
3	-	-	-	87	0
4	-	-	-	67	0
5	-	-	-	27	0
6	-	-	-	28	0
7	-	-	-	28	0
8	-	-	-	51	0
9	-	-	-	44	0
10	-	-	-	32	0
11	-	-	-	40	0
12	Alignment Pin	0	0	-	0
13	Alignment Pin	0	0	-	0

2.2.8.4. Structural Frequency Characteristics

2.2.8.4.1. Launch Configuration Frequency Characteristics

The following gives the dynamic frequency characteristics of the AMSU-A2 sensor unit in the launch configuration..

AMSU-A2 Sensor Unit							
Frequency	Mode	Effective Mass (kg)			Effective Inertia (kg.m²)		
(Hz, ± 2%)		Mx	M y '	Mz	Ix	Iy	Iz
92.5 (measured)	Momentum Compensation	0.57 1	0.380	0.0016	TBD_{AM2}	TBD_{AM2}	TBD_{AM2}
103.5 (measured)	First Structural Mode	16.87	16.08	0.081	TBD_{AM2}	TBD_{AM2}	TBD_{AM2}

AMSU-A2 Eigen Frequencies and Associated Effective Masses and Inertiae

2.2.8.4.2. In-Orbit Configuration Frequency Characteristics

N/A.

2.2.8.5. Structural **Mathematical Models - Applicability for AMSU-A2**

The requirements for delivery and format of instrument structural mathematical models are provided in AD2. This section defines the applicability of deliverable mathematical models for AMSU-A2.

2.2.8.5.1. Full Static Model

Not applicable for AMSU-A2.

2.2.8.5.2. Reduced Dynamic Model - Launch Configuration

Not applicable for AMSU-A2.

2.2.8.5.3. Reduced Dynamic Model - Deployed (In-Orbit) Configuration

A model is required for AMSU-A2.

2.2.8.5.4. Simplified Thermo-Elastic Model

A model is required for AMSU-A2. (TBC)

2.3. THERMAL INTERFACE DESCRIPTION

23.1. Thermal Control Concept

AMSU-A2 is a Category A instrument. Its thermal control is autonomous with dedicated radiators and heaters that are the responsibility of the instrument

The Instrument Supplier is responsible for the thermal design and the thermal analysis of the instrument within the METOP defined thermal interface constraints.

23.1.1 Thermal Control During Nominal Operations

The nominal operations correspond to the AMSU-A2 Measurement Mode and Unique Mode.

During these modes, the instrument unit temperature is controlled by passive design (blankets and radiating surfaces).

23.12. Thermal Control During Non Nominal / Contingency Operations

2.3.1.2.1. General

The non nominal / contingency mode anresponds to the AMSU-A2 Off Mode

During this mode, internal heaters are used to maintain survival temperatures which are controlled using internal thermostats.

2.3.1.2.2. Transient Attitudes

The AMSU-A2 shall be in Off Mode or Unique Warm Calibration Mode for any transient attitude sequence : in this mode, the instrument is self-protected against any Sun illumination condition, with the reflector internally parked to the warm calibration position..

2.3.1.2.3. METOP Orbit Control Modes

The AMSU-A2 in Off Mode or Unique Warm Calibration Mode is compatible with the METOP orbit control modes (See § 1.3.4.2.).

2.3.1.2.4. METOP Safe Mode

The AMSU-A2 in the Off mode is compatible with the METOP safe mode as defined in § 1.3.4.2.

2.3.2. Instrument Thermal Requirements

2.3.2.1. Instrument Temperature Range

2.3.2.1.1. On-Orbit Temperature Range

The following are the on-orbit temperature limits (for reference only, see § 2.3.2.2):

Deg. C	Operational (Measurement and Unique Modes)		Non Operational (Off Mode)		Switch-On
	Min.	Max.	Min.	Max.	Min.
Temperature	-7	+30	-22	+54	-22
Ref. Point Location	Receiver Shelf		Satellite interface		Receiver Shelf

2.3.2.1.2. Ground Testing Temperature limits

Deg. C	Operational (Measurement and Unique Modes)		Non Operation+ (Off Mode)		Switch-On
	Min.	Max,	Min.	Max.	Min.
Temperature	-12	+48	-22	+54	-22
Ref. Point Location	Receiver Shelf		Satellite interface		Receiver Shelf

Under these extreme temperatures, the instrument may not meet its radiomeuic specification.

2.3.2.1.3. Ground Storage and Transportation Temperature Range

During ground storage. with the instrument installed on the satellite, and during transportation of the complete spacecraft, the temperatures of the instrumentwillbemaintainedintherange:

-22 to +54 deg. c

233.2. Temperatures at the Interface

The AMSU-A2 is a category A instrument and as such is isolated from the spacecraft structure. Thermal control design is the responsibility of the Instrument Supplier.

2.3.2.3. Radiative Requirements

AMSU A2 has radiators oriented in the -Y and +Y directions (METOP satellite axis). The majority of .the remaining surfaces are insulated from the external environment and the spacecraft by use of MLI blankets. The view factors for the radiators are given in § 2.3.4.2

233. Thermal Control Budgets

2.3.3.1. Heater Power Budgets

Heater power is required by the AMSU-A2 when non operating (Off Mode). The corresponding heater power budget is dealt within § 3.4.2..

Note : the AMSU-A2 uses operational heaters that *are powered with the regulated power buses. The corresponding budget is included in the power budget from § 3.4.2.

2.3.3.2. Instrument Thermal Dissipation

The dissipation of the AMSU-A2 instrument is constant throughout the orbit and is (see § 3.4.2) :

AMSU-A2 Thermal Dissipation (Watts)			
Satellite Nominal Operating Modes			Safe Mode
Minimum Dissipation		Maximum Dissipation	min / Max
Meas.&Unique Mocks BOL	Off Mode	Measurement and Unique Modes EOL	Off Mode EOL
~~40.25~~ 29.35	0.0 / 0.2	~~42.0~~ 37.0	0.0

2333. Heat Exchange Budgets

2.3.3.3.1. Conductive Heat Transfer

The averaged calculated total conductive heat transfer between the Payload Module structure and the AMSU-A2 baseplate shall be in the range as shown :

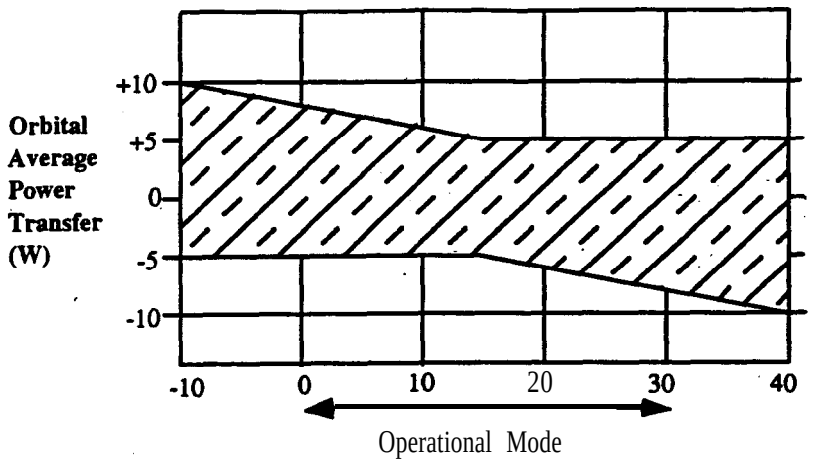

+: watts into PLM *- : watts out of PLM*

Figure 2.3.3.3/1 : Orbital Average Power Transfer

2.3.3.3.2. Joint Characteristics

AMSU A2 is thermally isolated from the spacecraft structure using instrument supplied G10 thermal washers and additional METOP-supplied stand-offs (TBC_{MET}).

2.3.3.3.3. Radiative Heat Transfer

The averaged calculated radiative heat transfer between the Payload Module structure and the AMSU-A2 for different cases, as determined from the coupled analysis, are :

Radiative Heat Transfer (Orbit Average, Watts)				
AMSU-A2	Satellite Nominal Operating Modes			Safe Mode
Radiators	Minimum Dissipation		Maximum Dissipation	min / Max
	Meas. Mode Unique Mode	Off Mode	Measurement and Unique Modes	Off Mode
TBD_{MET}	TBD_{MET}	TBD_{MET}	TBD_{MET}	TBD_{MET}

2.3.4. Thermal Interfaces

2.3.4.1. Conductive Interfaces

The total thermal conductance between the AMSU-A2 instrument and the Payload Module is 1 1.9 W/K.

2.3.4.1.1. Description

The conductive interfaces are the mounting feet' which are defined in the Mechanical Interface Control Drawing § 2.1.4.).

1) The mounting pad area is : 5.94 - 6.04 mm² / pad

2) Number of pads : 11

2.3.4.1.2. Bolts

The bolts are defined in § 2.2.4.

2.3.4.1.3. Thermal Stand-Offs .

See § 2.3.3.3.2.

23.4.2. Radiative Interfaces

2.3.4.2.1. Radiator Characteristics

The AMSU-A2 radiator areas are :

Radiator Viewing Direction (METOP axes)	Radiator Area		Thermal FOV
	Available (m²)	Used (m²)	Achieved
-Y	0.116	0.096	TBD_{MET}
+Y	0.145	0.119	TBD_{MET}

AMSU-A2 Radiator Areas and Thermal Fields of View

2.3.4.2.2. Thermo-Optical Properties

The external surfaces of the AMSU-A2 instrument, and the finishes used are given in the Thermal Interface Drawing (§ 2.1.4.). The mechanical characteristics (planarity, materials...) is described in the Mechanical Interface Description Sections (§ 2.2.4.).

The thermo-optical properties of the finishes are given in the following table :

#	Acronym	Surface /Material	Solar Absorptance			IR
			BOL	EOL 5yr.	EOL 6yr. *	Emit-tance
1	M2SIOXTTT	Rotating reflector /Silicon Oxide on VDA Composite	0.26	0.38	0.40	0.07
2	AGTEFL5MO	Exterior of scan housing, -X surface over elect-, -Y Surface, / Flexible Second Surface Mirror (FSSM) 5 mil Silver FEP Teflon	~~0.09~~ 0.08	0.15	0.16	0.80
3	EXTVDATTT	-X surface over elect-, outside of reflector, Exterior of scan housing / Aluminised Kapton Tape	0.12	0.13	0.13	0.05
4	M2APERTTT	AMSU-A2 Aperture.	0.50	0.50	050	0.50
5	KAPTON5MO	Over surfaces other than those specified above / ITO Aluminized Kapton (5-mil)	0.59	0.72	0.74	0.80

*: Extrapolated from 5 year data (TBC) Metop

AMSU-A2 Material Thermo-Optical Properties

23.43. **Thermal Heat** Capacity . .

The thermal heat capacity of AMSU-A2 is 42730 J/K.

23.4.4. Instrument Temperature Measurement

For the thermal control provided by the spacecraft of the instrument during AMSU-A2 Off Mode, one thermostat is mounted inside the AMSU-A2 itself.

Location : Receiver shelf A2

The set temperatures for the internally mounted survival and safety heater thermostats are :

- Closed at -18.0 ± 4.5 deg. C
- Open at -1.0 ± 4.5 deg. C

2.3.4.5. Heater Definition

The following heaters are implemented on the AMSU-A2:

Location	Number	Total Resistance (Ω at 25 deg. C) ± 5%	Resistance Variation ΔR/R
Survival Heater	1	56.3	TBD_{AMS2} / deg.. C
Safety Heater	1	56.3	TBD_{AMS2} / deg. C

The AMSU-A2 "survival" heater is not used for METOP. The survival temperatures are guaranteed by using the AMSU-A2 "safety" heater.

2.3.4.6. Thermal Interface Models

A reduced model is required for AMSU-A2 for the system thermal analysis, as specified in AD3.

See AD6 and AD7.

2.4. INSTRUMENT -AND DISTURBANCE INTERFACES

Definitions

The co-ordinate system used is the Instrument Interface Reference Frame, $F_{AMSU-A2}$. *The directions* of the $F_{AMSU-A2}$ axes are the same as the METOP Spacecraft Reference Frame Fs.

Static Imbalances

When the centre of mass Of the rotating assembly is not aligned on the rotation axis, forces are generated in the plane normal to the rotation axis-and time varying with the angular profile. The static imbalance is the product of the rotating assembly mass with the distance between the centre of mass and the rotation axis (unit : kg.m).

Dynamic imbalances

'If the products of inertia of the rotating assembly with respect to the rotation axis are non zero. the rotation along this rotation axis generates torques along the axis normal to the rotation axis. Assuming that the rotation axis is the X axis, the dynamic imbalances are the cross products of inertia Ixz and Ixy (unit : $kg.m^2$).

2.4.1. Instrument Induced Disturbances and Shocks

2.4.1.1. Non-Recurring Transient Events

None.

2.4.1.2. Continuous / Recurring Transient Events

Scanning Step Motor		
Rotation about	+Y axis	
Scan period	8 sec.	
Total moment of inertia of the rotating item	TBD_{AM2} g.m² about the rotational axis	
Compensation	Yes (see Fig. 2.4.1/1)	
Maximum residual kinetic momentum*	1.001 Nms on the X axis 1.200 Nms on the Y axis 0.001 Nms on the Z axis	
Maximum residual force* at the instr. interface without the effects of static imbalances	0.01 N on all three axis	
Maximum residual torque* without the effects of dynamic imbalances	0.0001 Nm on the X axis 1.80 Nm on the Y axis 0.0001 Nm on the Z axis	
Residual torque* vs. time	Measurement : see Figure 2.4.1/1 (Y axis)	
Residual torque* numeric description [1]	Available	
Residual torque* spectral decomposition (Y axis) (Figure 2.4.1/2)	*Frequency (Hz)*	*Amplitude (Nm)*
	5.47	0.08
	9.9	0.14
	14.8	0.13
	24.5	0.17
	31.1	0.17
	39.6	0.14
	44.3	0.27
	47.7	0.39
	50.0	0.24
Static imbalances (see definition § 2.4.)	$< 10^{-6}$ kg.m	
Dynamic imbalances (see definition § 2.4.)	TBD_{AM2}	

*: Quoted momentum, forces and torques include the AMSU-A2 torque compensation mechanism.

[1] This description (effective residual torque for each axis, including transitories. noise... and representative from 0 to 150 Hz.) shall be provided on a numeric tape with a sampling frequency greater than 1000 Hz and ~~an output format compatible with FORTRAN (double precision if possible).~~ in ASCII format.

2.4.1.3. Flexible **Modes**

The **AMSU-A2** does not have flexible mode on the X, Y, Z axes, in the range **[0 ,** IO] Hz.

2.4.1.4. **Induced High Frequency Disturbances (Micro-Vibrations)**

As illustrated in § 2.4.1.2, the AMSU-A2 induces disturbances on the Y axis in the range [10 , 60] Hz.

On the X, Z axes, the **AMSU-A2** does not **induce disturbances** above 10^{-2} N (force) and 10^{-2} Nm (torque) above 10 Hz.

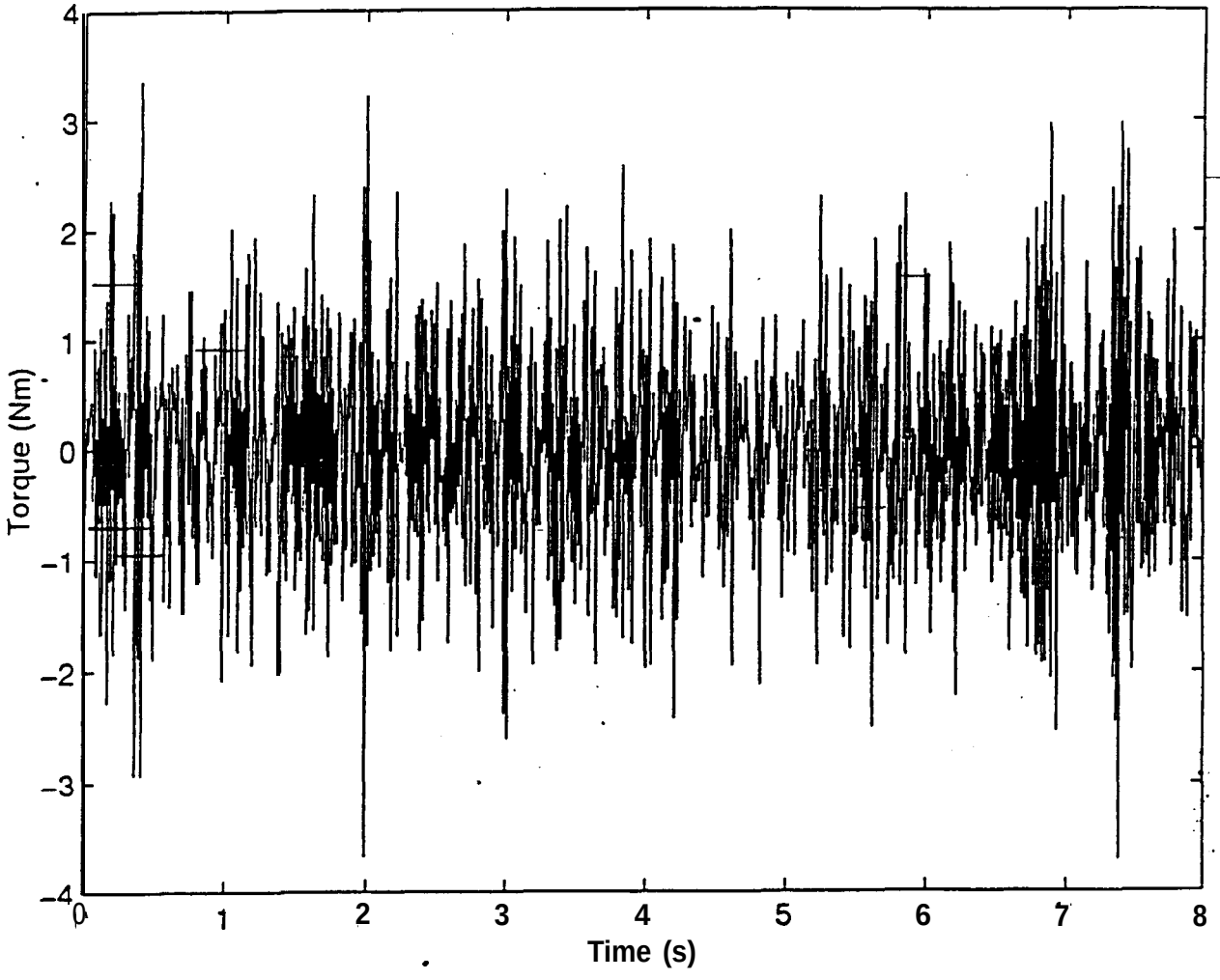

Figure 2.4.1/1 : AMSU-A2 Uncompensated Torque Profile (Measurement)
(For information only, See § 2.4.1.2.)

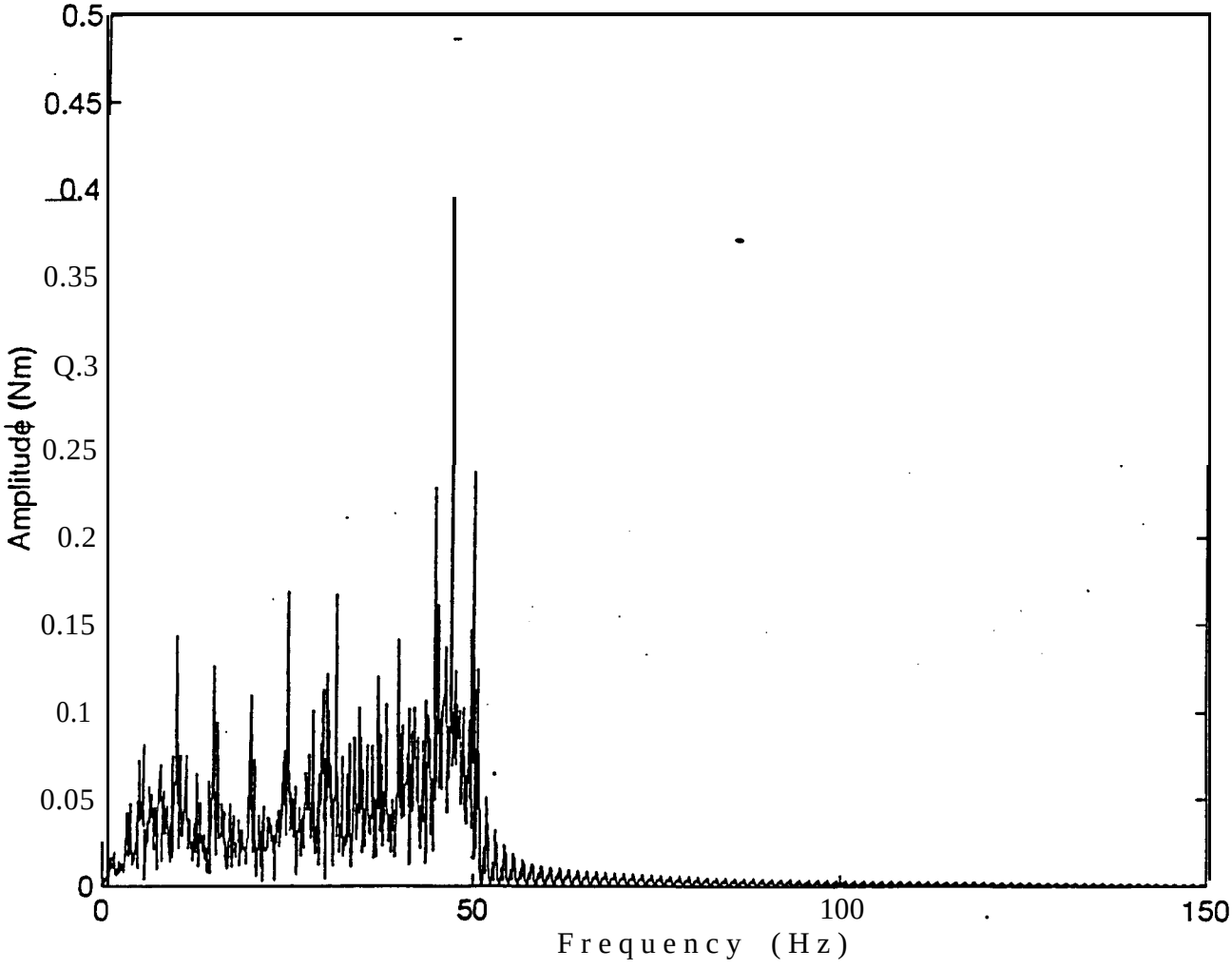

Figure 2.4.1/2 : Spectral Decomposition of the AMSU-A2 Disturbance
(For infonnation only, see § 2.4.1.2. for values)

2.4.2. Compatibility With Satellite Dynamic Environment

2.4.2.1. General Mission Environment

The AMSU-A2, in any operation mode, will be exposed to the following in-orbit dynamic environment (frequency range : 0 - 10 Hz) :

Linear acceleration on X, Y, Z axes at METOP satellite centre of mass *	0.02 m / s²
Angular rate about X, Y, Z axes	7 deg / s
Angular acceleration about X, Y, Z axes	0.5 deg / s²

* : With respect to the METOP satellite centre of mass, the AMSU-A2 reference point (see § 2.1.4.1) is located at :

$$\vec{G}_{SL}\vec{O}_{AMS2} = \begin{bmatrix} -2.1 \\ -1.1 \\ -0.8 \end{bmatrix} \text{(metres)} \qquad (TBC_{MET})$$

2.4.2.2. Environment During Satellite Deployment Sequence

The instrument, in any operation mode, will be exposed to the following In-orbit linear and angular acceleration levels at the instrument interface reference point :

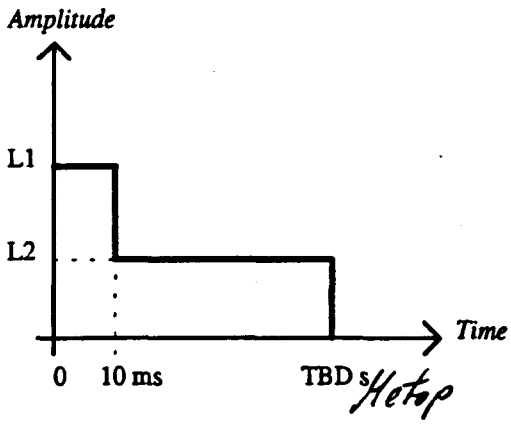

$$L1 \begin{vmatrix} X \\ Y \\ Z \end{vmatrix} = \begin{vmatrix} 0.3\ m/s^2 \\ 1.0\ m/s^2 \\ 1.0\ m/s^2 \end{vmatrix} \qquad L2 \begin{vmatrix} X \\ Y \\ Z \end{vmatrix} = \begin{vmatrix} 0.025\ m/s^2 \\ 0.100\ m/s^2 \\ 0.100\ m/s^2 \end{vmatrix}$$

Maximum Linear Acceleration Amplitude Versus Time

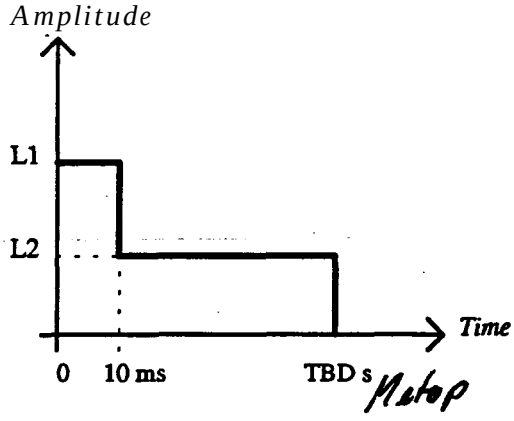

L1	X	=	1.3 deg./s²
	Y		1.3 deg./s²
	Z		13 deg./s²
L2	X	=	0.65 deg./s²
	Y		0.50 deg./s²
	Z		050 deg./s²

*Maximum Angular **Acceleration Amplitude** Versus **Time***

2.4.2.3. Micro-Vibration Environment

AMSU-A2 will be exposed to in-orbit TBD_{MET} disturbances with a frequency greater than 10 Hz.

3. COMMAND AND CONTROL, MEASUREMENT DATA, ELECTRICAL, EMC AND RFC INTERFACE DESCRIPTION

BLANK

3.1. ELECTRICAL INTERFACE OVERVIEW

The avionics interface between the METOP Payload Module (PLM) and the AMSU-A2 insaument is mainly handled via the Power Conditioning Unit (PCU), the Thermal Control Unit (TCU) and the NOAA Interface Unit (NIU).

Figure 3.1- 1 gives an overview on the electrical interfaces between the PLM and the AMSU-A2.

For adaptation of the single ended interfaces of the AMSU-A2, a special grounding concept is described in § 3.8 (EMC).

The command and housekeeping budget for the instrument is as follows :
- 4 pulse discrete commands
- 9 level discrete commands
- 10 digital B telemetry parameters, each 1 bit
- 15 analog telemetry parameters, each to be converted to 8 bits within NIU.

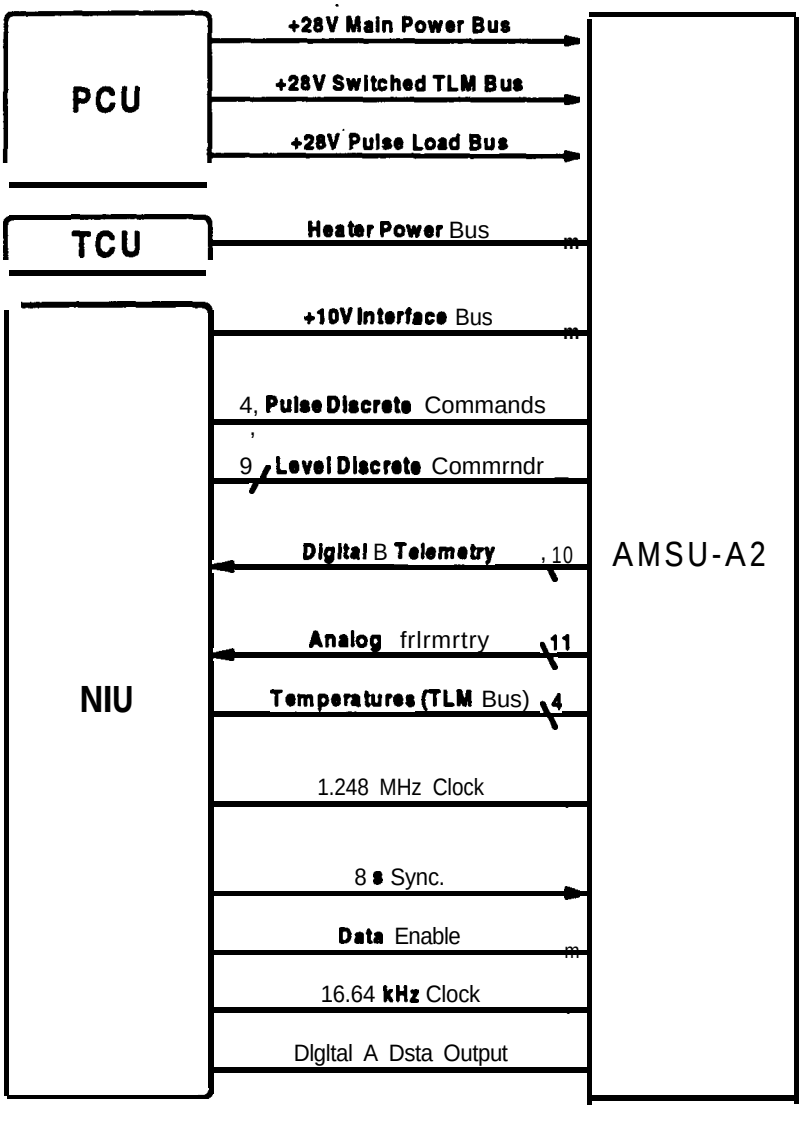

Fig. 3.1-I : *PLM to AMSU-A2 Electrical Interface Overview*

3.2. COMMAND AND CONTROL FUNCTIONAL DESCRIPTION

This section describes the command and control concept for the AMSU-A2 instrument.

'Command and Control' comprises the activities resp. data flows for commanding of the instrument as well as for the acquisition of instrument housekeeping data.

Additionally, the instrument provides an interface of measuremerit data which is described in § 3.3.

These two data sets are treated separately in the METOP satellite.

Commanding of the instrument and acquisition of instrument housekeepii telemetry is performed under the control of the Payload Module Controller (PMC). Commands are distributed from the PMC via the PLM OBDH Bus to the NOAA Interface Unit (NIU) which translates or converts the functional and electrical interfaces to NOAA instruments. Vice versa housekeeping data are acquired by the NIU from the instrument and are transmitted to the ground.

Three data sets are made available by the instrument :

- Digital A data
- Digital B data
- Analog data

Digital A data are in the above sense 'measurement data' and are handled by NIU. They are not routed via the PLM OBDH Bus to the PMC and not used for housekeeping by the satellite.

Digital B and analog data are housekeeping data and only the Digital B data are controlled by the NIU. Both are reported to the ground via S-band telemetry.

33.1. Protocol

Not applicable for AMSU-A2.

3.2.2. Telecommands

Telecommands to the instrument shall be provided by the NIU.

The minimum time between two consecutive commands is 18 sec, unless otherwise specified.

The instrument shall be commanded by Pulse Discrete Commands[1] and by Level Discrete Commands*.

---

1 *Pulse Discrete Command Definition*
The pulse discrete command is normally used to change the state of a latching relay in the instrument. An ON or TRUE condition is issued in the form of a pulse to the instrument over a single line.

2 Level *Discrete Command Definition*
The level discrete command presents a ON or TRUE (resp. OFF or FALSE) condition to the instrument full time, until the same command is given to change the state to OFF or FALSE (resp. OFF or FALSE).

All commands shall be issued to the instrument one command at a time.

Any pulse ON condition may last for considerable time in case of a spacecraft anomaly. The instrument shall not be damaged by such an occurrence.

The METOP satellite will provide capabilities for pre-programming of the AMSU-A2 of up to 36 hours. The instrument shall cope with this pre-programming period, and not require any intermediate command and control process.

The commands to operate the instrument shall be as listed in Table 3.2.2-l.

Note : The *operational* modes and sequences of commanding are defined in § 1.4 and 1.5.

3.2.2.1. Telecommand Definition

The satellite shall provide to the instrument all commands which are listed in Table 3.2.2-l. AMSU-A2 utilizes 4 Pulse Discrete and 9 Level Discrete commands.

Nr.	Telecommand	Mnemo	Type	Remarks
1	Module Power Disconnect		Pulse	
2	Module Power Connect		Pulse	
3	Survival Heater Power OFF		Pulse	
4	Survival Heater Power ON		Pulse	Not used on METOP
5	Module Totally OFF		Level	
6	Scanner A2 Power (ON/OFF)		Level	
7	Compensator Motor Power (ON/OFF)'		Level	
8	Warm Cal.		Level	
9	Cold Cal.		Level	
10	Nadir		Level	
11	Full Scan		Level	
12	Cold Cal. Position MSB		Level	
13	Cold Cal. Position LSB		Level	

Table 3.2.2-I: *Ttdecommand Definition*

The reset state of all level commands shall be "FALSE". For electrical character&tics, see § 3.5.2.1. (code CCL).

3.2.2.2. Telecommand Functional Description

1. Module Power Disconnect

Pulse discrete command.

This command consists in a negative active pulse used to switch to the "'OFF' position the latching relay which controls the 28 VDC regulated and 28 VDC pulsed power. It immediately removes all. 28 VDC excitation from the instrument. The antenna position is unknown The state Of power control relays is unchanged.

2. Module Power Connect

Pulse discrete command.

This command consists in a negative active pulse used to switch the "ON" position of the latching relay which controls the 28 VDC regulated and 28 VDC pulsed power.

3. Survival Heater Power OFF

Pulse discrete command.

This command consists in a negative active pulse used to switch the "OFF" position of the latching relay which controls the survival heater.

4. Survival Heater Power ON

Pulse discrete command.

This command consists in a negative active pulse used to switch the "ON" position of the latching relay which controls the survival heater.

This command is not used on METOP : the survival temperatures for AMSU-A2 are guaranteed using the AMSU-A2 provided "safety" heater and not the "survival" heater.

5. Module Totally OFF

Level discrete command.

In the OFF / FALSE state, this level discrete command positions the antenna to the Warm Calibration position, turns scanner motor power to OFF, and removes power to both the 28 VDC ~~regulated and pulsed busses.~~ main load and pulse load bus

To allow the operations of the instrument, this command shall in the NOT OFF / TRUE state.

Note : If the Module Power Disconnect command is commanded and then the Module Totally OFF command is commanded to the OFF state, then the Module Totally OFF command will be ignored.

6. Scanner A2 Power (ON/OFF)

Level discrete command
Commands the control of power to Scanner A2.
The OFF state turns off the scanner.
Note : the command *Scanner* A2 Power *Off* shall be preceded by the Warm Calibration On command, to park the scanner in the Warm Calibration position before power off.

7. Compensation Motor Power (ON/OFF)

Level discrete command.
Commands the control of power to compensation motor.

8. warm Cal.

Level discrete command.
The ON state commands the reflector to move to the Warm Calibration position and stop there.
The OFF state has no action on the instrument.

9. Cold Cal.

Level discrete command.
The ON state commands the reflector to move to the Cold Calibration position selected by the Cold Calibration Position Select commands (#12 and 13), and stop there.
The OFF state has no action on the instrument.

10. Nadir

Level discrete command.
The ON state commands the reflectors to move to the Nadir position (scene station 15, which is not a true nadir) and stop there.
The OFF state has no action on the instrument.

11. Full Scan

Level discrete command.
The ON state commands the full scan mode (normal operation scanning mode).
When the OFF state is given, the reflector completes the scanning cycle and parks at the warm load.

Note : The priority in which the above 8, 9, 10 and 11 commands are executed, in case all (or part) lines are set to active state, is (highest to lowest) : Full Scan Mode, **Warm Cal Mode, Cold Cal** Mode and Nadir Mode.

12. Select Cold Cal Position MSB and

13. Select Cold Cal Position LSB

Level discrete commands used to select the cold calibration position according to the following :

MSB	LSB	Position Number	Angle From METOP -X Axis *
0	0	Position 1	6.667 deg.
0	1	Positioli 2	8.333 deg.
1	0	Position 3	9.999 deg.
1	1	Position 4	13.332 deg.

* to center of cold cal position

3.23. Housekeeping Telemetry

This section describes the AMSU-A2 Digital B and Analog Telemetry.

333.1. General Requirements

The NIU shall only acquire the instrument-provided dig&al-B and analog HK data at any time when the instrument is in Measurement Mode or Unique Mode.

The NIU will read out the following housekeeping telemetry formats from the instrument:

- Analog HK
- Digital HK ("Digital B").

The NIU will sample both analog and digital B housekeeping telemetry, with periods of :

- 16 seconds nominally
- up to 1/8 s for any selected parameter on request.

Analog data shall be acquired and converted within the NIU to 8 bit digital information with a 5.12 V full scale resolution (LSB = 20 mV).

No instrument housekeeping data shall be monitored by the METOP satellite Nevertheless the Digital B data will be checked on-board for verification of command execution.

Note : for those commands that do not result in a change of a Digital B point, the verification of the command receipt by the instrument will be done by the Ground System with the instrument provided Analog Telemetry points.

3332. Digital B Telemetry

The instrument shall provide the Digital B telemetry as listed in Table 3.2.3-l.

Each of the 10 Digital B telemetry points shall indicate the status of one of the pairs of commands of § 3.2.2.

~~Availability of Digital B telemetry : TBD~~ AMS2.

Nr.	Telemetry Point Name	State		Remark
		Logic "1" (Low Voltage)	Logic "0" (High Voltage)	
1	Scanner Power ON/OFF *	ON	OFF	
2	Antenna in Warm Cal. Position	YES	NO	
3	Antenna in Cold Cal. Position	YES	NO	
4	Antenna in Nadir Position	YES	NO	
5	Full Scan	YES	NO	
6	Module Power *	connect	Disconnect	
7	Compensator Motor ON/OFF *	ON	OFF	
8	Survival Heater ON/OFF *	ON	OFF	
9	Cold Cal. Position MSB	see Note 1		
10	Cold Cal. Position LSB			

*: Must correctly indicate power status with instrument power OFF

Note 1: States of Digital B # 9 and 10 according to commands 12 and 13 (§ 3.2.2.2.)

Note 2: If telemetry points 2, 3, 4 & 5 all indicate Logic "0", the instrument antenna is in Warm Cal. Position and the instrument does not generate data

Table 33.3-l: ***AMSU-A2 Digital B Telemetry***

3.233. Analog Telemetry

The AMSU-A2 provides analog telemetry channels as listed in Table 3.2.3-2 to monitor on ground the healthoftheinstrumem. It shall be considered that telemetry of analog voltage and current (analog telemetry) will be valid by 8.0 s after switching-on of instrument telemetry, i.e. after MODULE POWER CONNECT command has been sent to the AMSU-A2.

The temperature telemetry points (first 4 analog telemetry points) shall be available when the analog telemetry power bus is applied to the instrument

Typical valid data ranges and values are shown in Table 3.2.3-2

The telemetry points shall be defined as following :

1.) Scanner Motor Temperature

This telemetry point measures the output of the thermistor located on the A2 scanner motor. It is powered by +28 V Switched Telemetry Bus.

2.) ***Compensator Motor Temperature***

This telemetry point measures the output of the thermistor located on the A2 compensator motor. It is powered by +28 V Switched Telemetry Bus.

3.) RF ***Shelf Temperature***

This telemetry point measures the output of the thermistor located on the A2 warm load It is powered by +28 V Switched Telemetry Bus.

4.) Warm Load A2 Temperature

This telemetry point measures the output of the thermistor located on the A2 warm load It is powered by +28 V Switched Telemetry Bus.

5.) Compensator Motor Current (Average)

This telemetry point measures the average current flow in the A2 compensator motor.

6.) ***Antenna Drive Motor Current (Average)***

This telemetry point measures the average current flow in the A2 drive motor.

7.) + *15* VDC ***(Signal Processing)***

This telemetry point measures the DC voltage (directly proportional to +15 V) of the secondary power at the output of the instrument DC/DC converter, that feeds the signal processing electronics.
This voltage is independent and isolated from all other secondary powers at the output of the DC/DC converter.

8.) +15 VDC (Antenna Drive)

This telemetry point measures the DC voltage (directly proportional to +15 V) of the secondary power at the output of the instrument DC/DC converter, that feeds the antenna drive electronics. This voltage is independent and isolated from all other secondary powers at the output of the DC/DC converter.

9.) *-15 VDC (Signal Processing)*

This telemetry point measures the DC voltage (directly proportional to -15 V) of the secondary power at the output of the instrument DC/DC converter, that feeds the signal processing electronics.
This voltage is independeut and isolated from all other secondary powers at the output of the DC/DC converter.

10. -15 VDC (Antenna Drive)

This telemetry point measures the DC voltage (directly proportional to -15 V) of the secondary power at the output of the instrument DC/DC converter, that feeds the antenna drive electronics. This voltage is independent and isolated from all other secondary powers at the output-of the DC/DC converter.

Il.) +10 VDC (Receiver)

This telemetry point measures the DC voltage (directly proportional to +10 V) of the secondary power at the output of the instrument DC/DC converter, that feeds the receiver electronics. This voltage is independent and isolated from all other secondary powers at the output of the DC/DC converter.

12.) *+5* VDC *(Signal Processing)*

This telemetry point measures the DC voltage (directly proportional to +5 V) of the secondary power at the output of the instrument DC/DC converter, that feeds the signal processing electronics.
This voltage is independeut and isolated from all other secondary powers at the output of the DC/DC converter.

13.) *+5* VDC *(Antenna Drive)*

This telemetry point measures the DC voltage (directly proportional to +5 V) of the secondary power at the output of the instrument DC/DC converter. that feeds the antenna drive electronics. This voltage is independent and isolated from all other secondary powers at the output of the DC/DC converter.

14.) +10 VDC LO Voltage Ch I (23.8 GHz)

This telemetry point measures the DC voltage (directly proportional to +10 V) of the secondary power at the output of the instrument DC/DC converter, that drives the local oscillator for channel 1.

This voltage is independent and isolated. from all other secondary powers at the output of the DC/DC convertex.

15.) +10 VDC LO Voltage Ch 2 (31.4 *GHz)*

This telemetry point measures the DC voltage (directly proportional to +10 V) of the secondary power at the output of the instrument DC/DC converter, that drives the local oscillator for channel 2.

This voltage is independent and isolated from all other secondary powers at the output of the DC/DC converter.

The analog telemetry shall have the performance as defined in Table 3.2.3-2. The transfer function between physical range and voltage range is part of the deliverables / as-built data.

Nr.	Telemetry Point Name	Physical Range	Remarks
1	Scanner Motor Temperature	-30 to +70 deg. C	Powered by Analog Temp. TLM Bus
2	Compensator Motor Temperature	-30 to +70 deg. c	Powered by Analog Temp. TLM Bus
3	RF Shelf Temperature	-30 to +70 deg. C	Powered by Analog Temp. TLM Bus
4	Warm Load A2 Temperature	-30 to +70 deg. c	Powered by Analog Temp. TLM Bus
5	Compensator Motor Current (Average)	50 to 214 mA	
6	Antenna Drive Motor Current (Average)	50 to 214 mA	
7	+15 VDC (Signal Processing)	14.0 to 16.0 V	
8	+15 VDC (Antenna Drive)	13.5 to 18.0 V	
9	-15 VDC (Signal Processing)	-16.0 to -14.0 V	
10	- 15 VDC (Antenna Drive)	-16.5 to -13.5 V	
11	+ 10 VDC (Receiver)	9.0 to 11.0 V	
12	+5 VDC (Signal Processing)	4.0 to 6.0 V	
13	+5 VDC (Antenna Drive)	4.0 to 6.0 V	
14	+ 10 VDC LO Ch l(23.8 GHz)	9.0 to 11.0 V	
15	+ 10 VDC LO Ch 2 (31.4 GHz)	9.0 to 11.0 V	

Note : for #7 to #15 (resp. #5 and #6), when not active, the telemetry points indicate 0 V voltage (resp. OmA current).

Table** 3.2.3-2 **: Analog Telemetry

Following are the Analog Telemetry status as function of the different t&commands :

Nr.	Command	Analog Telemetry Status	Timing
1	Module Power Disconnect	# 1 -4 active (temperatures) *	
2	Module Power Connect	All analog TLM active	after 8 s
3	Survival Heater Power OFF	No change	
4	Survival Heater Power ON	No change (not used on METOP)	
5	Module Totally OFF	# 1 -4 active (temperatures) *	
6	Scanner A2 Power (ON/OFF)	# 6 (drive current) changes, all others no change	
7	Compensator Motor Power (ON/OFF)	# 5 (drive current) changes, all others no change	
8	Warm Cal.	All analog TLM active (no change)	
9	Cold Cal.	All analog TLM active (no change)	
10	Nadir	All analog TLM active (no change)	
11	Full Scan	All analog TLM active (no change)	
12	Cold Cal. Position MSB	All analog TLM active (no change)	
13	Cold Cal. Position LSB	All analog TLM active (no change)	

• : +28 V Switched Telemetry Bus powered.

Table 3.2.3-3 : ***Instrument*** *Analog* ***Telemetry*** *vs.* ***Commands***

3.2.4. Telecommand Verification

No check shall be performed by the spacecraft to verify whether the command is consistent with the active instrument mode.

The execution of each command shall be verified by the spacecraft The interrelationship between commanding and the verification of a command in the Digital B telemetry is defined in Table 3.2.4-l. The column 'Timing" specifies the maximum time delay between the arrival of a command in the instrument and change of the corresponding Digital B parameter.

The parameter value acquired apart from the routine HK cycle will be discarded after verification and not transmitted to ground. Execution failure will be reported in the history area.

In case of a command execution error by the AMSU-A2, the PLM NIU shall report this error to the ground and no autonomous corrective action, including AMSU-A2 switch-off, shall be performed by the spacecraft.

#	Command	Constraint	Command Verification Digital B	Timing
1	Module Power Disconnect		Module Power "Disconnect"	≤ 2 sec
2	Module Power Connect		Module Power "Connect"	≤ 2 sec
3	Survival Heater Power OFF		Survival Heater ON/OFF "OFF"	≤ 2 sec
4	Survival Heater Power ON	Not used on METOP	Survival Heater ON/OFF "ON"	≤ 2 sec
5	Module Totally OFF		Module Power "Disconnect"	≤ 64 sec
6	Scanner A2 Power ON/OFF		Scanner A2 Power ON/OFF "ON resp. OFF"	≤ 18 sec
7	Compensator Motor Power ON/OFF		Compensator Motor ON/OFF "ON resp. OFF"	≤ 18 sec
8	Warm Cal.		Antenna in Warm Cal. Position "YES resp. NO"	≤ 18 sec
9	Cold Cal.		Antenna in Cold Cal. Position "YES resp. NO"	≤ 18 sec
10	Nadir		Antenna in Nadir Cal. Position "YES resp. NO"	≤ 18 sec
11	Full Scan		Full Scan "'YES resp. NO"	≤ 18 sec
12	Select Cold Cal Position MSB		Cold Cal. Position MSB and LSB 'Logic 1 or Logic 0"	< 72 sec
13	Select Cold Cal Position LSB		see § 3.2.2.2., commands 12 and 13	< 72 sec

Table 3.2.4-l: Telecommand Verification

3.2.5. METOP Specific Thermal Control Electrical Interfaces

For the TIROS application, the survival heater is operated on the same bus as the motors (Pulse Load Bus) and is activated by telecommand from the spacecraft either as a result of direct intervention by the ground or as part of the power down sequence.

For the METOP application, this AMSU-A2 survival heater is not used, Instead, the AMSU-A2 internal "safety" heater, with associated thermostat, is directly connected via the J01 connector to the unregulated heater bus.

3.2.6. Satellite Services / Synchronization

Note : Satellite Services are defined as all Command and Control tasks which will be performed by the PLM or the SVM to support instrument operations.

Note : the synchronization of measurement data read-out is defined in § 3.3.2.

For instrument scan operation, the spacecraft will provide AMSU-A2 with a frame synchronization pulse (FSP) once every 8 seconds. Upon receipt of the FSP, the antenna of the instrument shall be at cell #1 ready to begin a sample period. At the end of the scan, the antenna will return to the beginning of the scan and be ready to begin the next scan exactly eight seconds later.

The NIU shall provide to the instrument a clock signal of 1.248 MHz.

The 8 second pulse is phase correlated to the 1.248 MHz as shown in Figure 3.2.6-l.

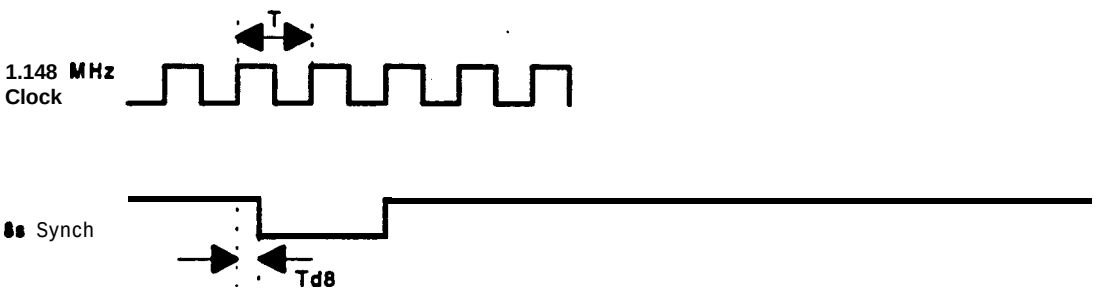

- T = VI.248 MHz = 0.80128 µseconds
- Td8 ≤ T

Figure 3.2.6-1 : Time Correlation Between Synchronization Signals and 1.248 MHz Clock

3.3. MEASUREMENT DATA TRANSFER FUNCTIONAL DESCRIPTION

33.1. Data Rate

The AMSU-A2 Digital A Data Interface to the NIU is asynchronous in nature. Data are sampled by AMSU-A2 in a FIFO which can store a total number of 2048 words (16 bits) i.e. one scan (8 s) of Digital A Data can be stored at a time. The NIU can request data from the AMSU-A2 at any time. The only requirement that AMSU-A2 imposes on the NIU is that the NIU requests data at a rate faster than AMSU-A2 FIFO fills up. Otherwise data could be lost by being overwritten.

Data acquisition on METOP is performed by the NIU synchronous to the 8 s. Sync pulse and the NIU internal 0.1 s. Sync cycle as depicted in Figure 3.3.2-1a.

In Measurement Mode (full scan), the AMSU-A2 generates 312 bytes of measurement data per scan (i.e. during 8 sec.).

In Unique Mode (warm calibration, cold calibration, nadir position), the AMSU-A2 generates 288 bytes of measurement data per scan (i.e. during 8 sec.).

The METOP implementation will not distinguish between these modes. Every 100 ms, the NIU acquires 7 16-bit words from the AMSU-A2. Hence an apparent raw data rate of 1.120 kbps.

When no measurement data are available, AMSU-A2 provides fill words (0001 HEX) to the NIU following each Data Enable Pulse during the FIFO empty interval. The Digital A data as sent by the instrument shah be such that no valid data of 0001H shall be included.

Note : These data are not packetized within the instrument.

33.2. Measurement Data Acquisition

The measurement data shall be aquired via the digital A Data interface.

The interface shall consist of the :

- Data Enable pulse line
- Data Clock line
- Digital A Data line.

The AMSU A2 serial data are clocked into the NIU by means of the data clock (16.64 kHz), whenever the data enable pulse is presented to the instrument.

Both clock and enable pulse shah be delivered by the NIU.

The words shall be separated by a gap in the data enable pulse.

The occurrence of the 8 seconds synchronisation pulse will start the internal instrument cycle.

The data acquisition shah be as detailed in Figures 3.3.2-1a and 3.3.2-1b.

The METOP satellite will not detect AMSU-A2 Digital A Data sync. sequences (3 bytes of FF HEX) nor identify and remove the fill words that are intermingled with the valid data, but transmit data to ground only as received from AMSU-A2. Synchronization and removal of fill words has to be performed during data processing on-ground.

$Td_{AMSU-A2}$ defines the start of the first data enable pulse relative to the start of the 8 second cycle, resp. the start of the 0.1 second (NIU internal) cycle.

$Td_{AMSU-A2}$ shall be $(2 * 16 * T_{16.64k} + 2 * T_{16.64k}/5)$. $T_{16.64k}$ is the time period of the 16.64 kHz clock (CLT).

Note : $Td_{AMSU-A2}$ is approximately 1.923 ms $\pm 10^{-4}$.

During the (continuous) data acquisition, the data enable pulse shall repeat every $Ts_{AMSU-A2}$. $Ts_{AMSU-A2}$ shall be $16 * T_{16.64k}$.

Note : $Ts_{AMSU-A2}$ is approximately 9615 µs $\pm 10^{-4}$.

The 1.248 MHz Clock and the 16.64 kHz is derived from a free running oscillator in the NIU. The 8 s Sync pulse is derived in the NIU from the OBDH Bus Broadcast Pulse. The OBDH Bus Broadcast Pulse is generated by the oscillator in the CCU on the Service Module. The leading edge of these pulses will be phase correlated to the 1.248 MHz Clock.

Each of these hvo oscillators has its own initial setting failure, temperature drift and ageing. This will result in a tolerance of the number of clocks per sync. pulse period as depicted in Table 3.3.2.-1. The specified tolerances are the maximum tolerances during mission lifetime and over nominal temperature range conditions.

	Sync 0.1s	Sync. 8 sec
No. of 1.248 MHz cycles	124800 ± 150 *)	9.984 * 10^6 ± 1199
No. of 16.64 kHz cycles	1664 ± 2 *)	133120 ± 16

*) Tolerance figure for last (10th) 0.1 s period of a 1 s cycle only. For the 9 first cycles the tolerance figure is ± 0. The tolerance range does not affect METOP specified data transfer.

Table 3.3.2.-1 : Sync. *Period Tolerances in Numbers of 1.248 MHz and* 16.64 *kHz Cycles*

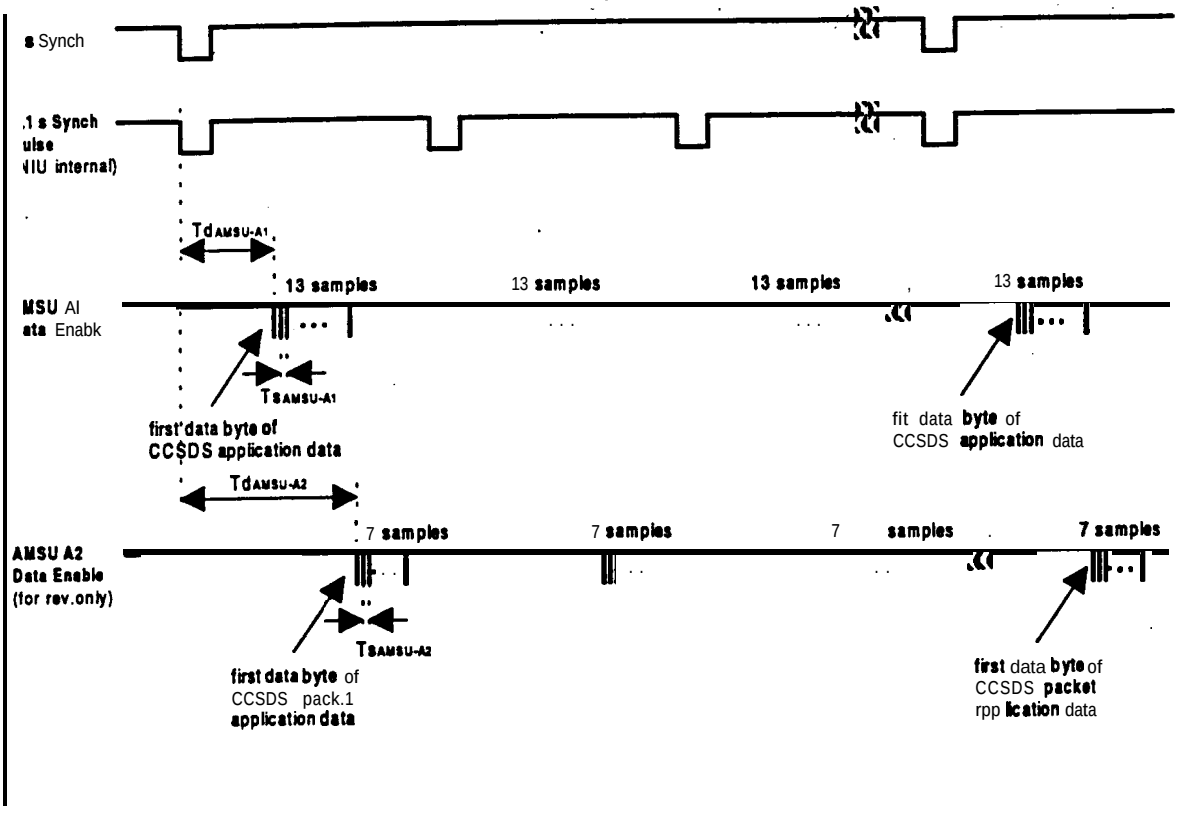

Figure 3.3.2-1a : AMSU A1/2 Measurement Data Acquisition Sampling Timing

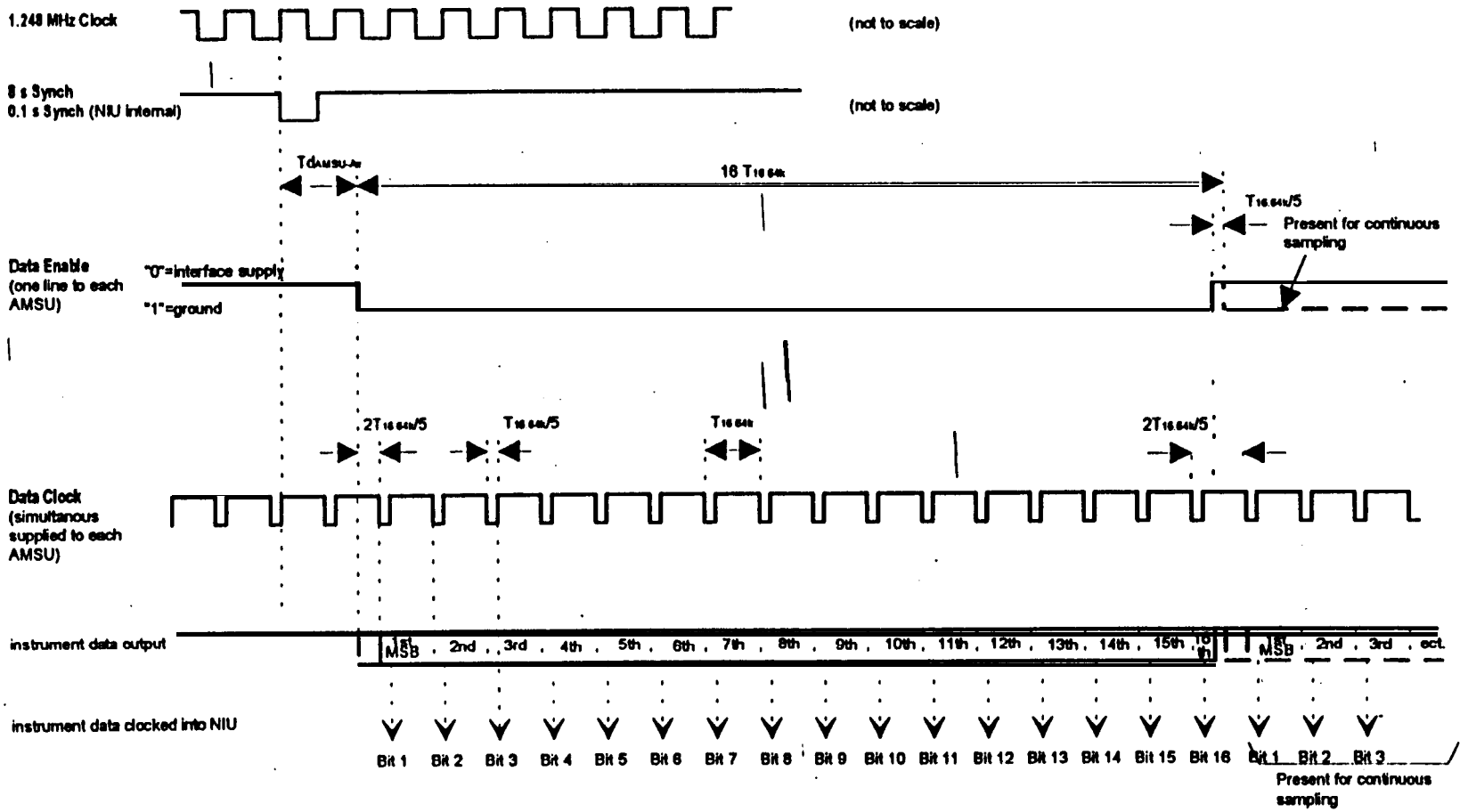

Note: data enable and data clock are clocked by the low to high transition of the 1.248 MHz clock and by the high to low transition of the 8 s Synch pulse

Figure 3.3.2-1b : AMSU A1/2 Measurement Data Acquisition Detailed Timing

3.3.3. Measurement (Digital A) Data Format

3.3.3.1. Data Format in AMSU-A2 Measurement Mode

In Measurement Mode (full scan), the AMSU-A2 generates 316 8-bit words of measurement data per scan, as illustrated in Table 3.3.3.1/1, with the following remarks :

- The MSP is the most significant portion of a particular measurement while the LSP is the least significant portion of the particular measurement.
- The "first" set of reading for a particular reflector position is made prior to the integration interval, while the "second" set of readings is made approximately ½ way through the integration period.
- AMSU-A2 includes in the Digital A data flow the necessary number of "fill words" to cope with the data acquisition rate by the NIU (see § 3.3.1).
- The format of Reflector Position data is DDDDDDDDDDDDDDE0
  D = Data
  E = Error bit, 0 = not in spec, 1 = spec
  0 = Zero
- The format of Radiometer data (scene position, cold calibration 1 & 2, temperature sensor and warm calibration 1 & 2) is : DDDDDDDDDDDDDDD0
  D = Data
  0 = Zero
  If A/D latch up flag then format at the radiometer and temperature sensor data
  0000000000000000
- The Temperature Sensor Reference Voltage (Byte 299 & 300 for Measurement Mode) is utilized for temperature sensors 13-19 only

3.3.3.2. Data Format in AMSU-A2 Unique Mode (Warm Calibration)

In Unique Mode (Warm Calibration), the AMSU-A2 generates 288 8-bit words of measurement data per scan, as illustrated in Table 3.3.3.2/1. The same remarks as in § 3.3.3.1 apply here.

3.3.3.3. Data Format in AMSU-A2 Unique Mode (Cold Calibration)

In Unique Mode (Cold Calibration), the AMSU-A2 generates 288 8-bit words of measurement data per scan, as illustrated in Table 3.3.3.3/1. The same remarks as in § 3.3.3.1 apply here.

3.3.3.4. Data Format in AMSU-A2 Unique Mode (Nadir Position)

In Unique Mode (Nadir Position), the AMSU-A2 generates 288 8-bit words of measurement data per scan, as illustrated in Table 3.3.3.4/1. The same remarks as in § 3.3.3.1 apply here.

A2 FRAME BYTE N°	PARAMETER	
1 - 3	Sync. Sequence (FF Hex)	
4	Unit Identification and Serial Number	See § 3.3.3.5.
5	Digital Housekeeping Data 1	See § 3.3.3.5.
6	Digital Housekeeping Data 2	See § 3.3.3.5.
7	Digital Housekeeping Data 3	See § 3.3.3.5.
8	Digital Housekeeping Data 4	See § 3.3.3.5.
9	Reflector, Position 1, MSP, First reading	
10	Reflector, Position 1, LSP, First reading	
11	Reflector, Position 1, MSP, Second reading	
12	Reflector, Position 1, LSP, Second reading	
13	Scene Position 1, Channel 1, MSP	
14	Scene Position 1, Channel 1, LSP	
15	Scene Position 1, Channel 2, MSP	
16	Scene Position 1, Channel 2, LSP	
17	Reflector, Position 2, MSP, First reading	
18	Reflector, Position 2, LSP, First reading	
19	Reflector, Position 2, MSP, Second reading	
20	Reflector, Position 2, LSP, Second reading	
21	Scene Position 2, Channel 1, MSP	
22	Scene Position 2, Channel 1, LSP	
23	Scene Position 2, Channel 2, MSP	
24	Scene Position 2, Channel 2, LSP	
25	Reflector, Position 3, MSP, First reading	
26	Reflector, Position 3, LSP, First reading	
27	Reflector, Position 3, MSP, Second reading	
28	Reflector, Position 3, LSP, Second reading	
29	Scene Position 3, Channel 1, MSP	
30	Scene Position 3, Channel 1, LSP	
...	...	
247	Scene Position 30, Channel 2. MSP	
248	Scene Position 30, Channel 2, LSP	
249	Reflector, Cold Cal. Position, MSP, First reading	
250	Reflector. Cold Cal. Position, LSP. First reading	
251	Reflector, Cold Cal. Position, MSP. Second reading	

Table 3.3.3.1/1 : A MSU-A2 Data Format - Measurement (Full Scan) Mode (1/2)

A2 FRAME BYTE N°	PARAMETER	
252	Reflector, Cold Cal. Position, LSP, Second reading	
253	Cold Calibration 1, Channel 1, MSP	
254	Cold Calibration 1, Channel 1, LSP	
255	Cold Calibration 1, Channel 2, MSP	
256	Cold Calibration 1, Channel 2, LSP	
257	Cold Calibration 2, Channel 1, MSP	
258	Cold Calibration 2, Channel 1, LSP	
259	Cold Calibration 2, Channel 2, MSP	
260	Cold Calibration 2, Channel 2, LSP	
261	Temp Sensor 1, MSP	See § 3.3.3.5.
262	Temp Sensor 1, LSP	
263	Temp Sensor 2, MSP	
264	Temp Sensor 2, LSP	
...	...	
297	Temp Sensor 19, MSP	
298	Temp Sensor 19, LSP	
299	Temp Sensor Reference Voltage, MSP	
300	Temp Sensor Reference Voltage, LSP	
301	Reflector Warm Cal. Position, MSP, First reading	
302	Reflector Warm Cal. Position, LSP, First reading	
303	Reflector Warm Cal. Position, MSP, Second reading	
304	Reflector Warm Cal. Position, LSP, Second reading	
305	Warm Calibration 1, Channel 1. MSP	
306	Warm Calibration 1, Channel 1, LSP	
307	Warm Calibration 1, Channel 2, MSP	
308	Warm Calibration 1, Channel 2, LSP	
309	Warm Calibration 2, Channel 1, MSP	
310	Warm Calibration 2, Channel 1, LSP	
311	Warm Calibration 2, Channel 2, MSP	
312	Warm Calibration 2, Channel 2, LSP	

Table 3.3.3.1/1 : AMSU-A2 Data Format - Measurement (Full Scan) Mode (2/2)

A2 FRAME BYTE N°	PARAMETER	
1-3	Sync. Sequence (FF Hex)	
4	Unit Identification and Serial Number	See § 3.3.3.5.
5	Digital Housekeeping Data 1	See § 3.3.3.5.
6	Digital Housekeeping Data 2	See § 3.3.3.5.
7	Digital Housekeeping Data 3	See § 3.3.3.5.
8	Digital Housekeeping Data 4	See § 3.3.3.5.
9	Reflector, Warm Cal. Position, MSP, First reading	
10	Reflector, Warm Cal. Position, LSP, First reading	
11	Reflector, Warm Cal. Position, MSP, Second reading	
12	Reflector, Warm Cal. Position, LSP, Second reading	
13	Warm Cal. Position, Channel 1, MSP	
14	Warm Cal. Position, Channel 1, LSP	
15	Warm Cal. Position, channel 2, MSP	
16	Warm Cal. Position, Channel 2, LSP	
...	...	
Bytes 9 through 16 are repeated 29 times for a total of 30 data sets		
...	...	
249	Temp. Sensor 1, MSP	See § 3.3.3.5.
250	Temp. Sensor 1, LSP	
251	Temp. Sensor 2, MSP	
252	Temp. Sensor 2, LSP	
...	...	
285	Temp. Sensor 19, MSP	
286	Temp. Sensor 19, LSP	
287	Temp. Sensor Reference Voltage, MSP	
288	Temp. Sensor Reference Voltage, LSP	

Table 3.3.3.2/1 : AMSU-A2 Data Format -Unique (Warm Calibration) Mode

A2 FRAME BYTE N°	PARAMETER	
1 - 3	Sync. Sequence (FF Hex)	
4	Unit Identification and Serial Number	see § 3.3.35.
5	Digital Housekeeping Data 1	see § 3.3.3.5.
6	Digital Housekeeping Data 2	See § 3.3.3.5.
7	Digital Housekeeping Data 3	See § 3.3.3.5.
8	Digital Housekeeping Data 4	See § 3.3.3.5.
9	Reflector, Cold Cal. Position, MSP, First reading	
10	Reflector, Cold Cal. Position, LSP, First reading	
11	Reflector, Cold Cal. Position, MSP, Second reading	
12	Reflector, Cold Cal. Position, LSP, Second reading	
13	Cold Cal. Position 1, Channel 1; MSP	
14	Cold Cal. Position 1, Channel 1, LSP	
15	Cold Cal. Position 1, Channel 2, MSP	
16	Warm Cal. Position 1, Channel 2, LSP	
...	...	
Bytes 9 through 16 are repeated 29 times for a total of 30 data sets		
...	...	
249	Temp. Sensor 1, MSP	See § 3.3.3.5.
250	Temp. Sensor 1, LSP	
251	Temp. Sensor 2, MSP	
252	Temp. Sensor 2, LSP	
...	...	
285	Temp. Sensor 19, MSP	
286	Temp. Sensor 19, LSP	
287	Temp. Sensor Reference Voltage, MSP	
288	Temp. Sensor Reference Voltage, LSP	

Table *3.3.3.3/1* : *AMSU-A2 Data Format -Unique (Cold Calibration) Mode*

A2 FRAME BYTE N°	PARAMETER	
1 - 3	Sync. Sequence (FF Hex)	
4	Unit Identification and Serial Number	See § 3.3.33.
5	Digital Housekeeping Data 1	See § 3.3.3.5.
6	Digital Housekeeping Data 2	See § 3.3.35.
7	Digital Housekeeping Data 3	See § 3.3.3.5.
8	Digital Housekeeping Data 4	see § 3.3.3.5.
9	Reflector, Position 15, MSP, First reading	
10	Reflector, Position 15, LSP, First reading	
11	Reflector, Position 15, MSP, Second reading	
12	Reflector, Position 15. LSP, Second reading	
13	Nadir Position, Channel 1, MSP	
14	Nadir Position, Channel 1, LSP	
15	Nadir Position, Channel 2, MSP	
16	Nadir Position, Channel 2, LSP	
...	...	
Bytes 9 through 16 are repeated 29 times for a total of 30 data sets		
...	...	
249	Temp. Sensor 1, MSP	See § 3.3.3.5.
250	Temp. Sensor 1, LSP	
251	Temp. Sensor 2, MSP	
252	Temp. Sensor 2, LSP	
...	...	
285	Temp. Sensor 19. MSP	
286	Temp. Sensor 19, LSP	
287	Temp. Sensor Reference Voltage, MSP	
288	Temp. Sensor Reference Voltage, LSP	

Table 3.3.3.4/1 : AMSU-A2 Data Format -Unique (Nadir Position) Mode

3.3.3.5. AMSU-AZ Data Word Description and Temperature Sensor Assignment

The AMSU-A2 Digital A data uses the following words :

- housekeeping data **#1, #2, #3** and **#4,** illustrated in Table **3.3.3.5/1**
- identification words, illustrated in Table **3.3.3.5/2**

The temperature sensor **assignment** is illustrated in Table **3.3.3.5/3.**

	DIGITAL BIT	HOUSEKEEPING DATA, BYTE NUMBER 1 DESCRIPTION
LSB	0	0
	1	Full Scan Mode : 0 = Not Full Scan, 1 = Full Scan
	2	Warm Cal. Mode : 0 = Not Warm Cal, 1 = Warm Cal
	3	Cold Cal. Mode : 0 = Not in Cold Cal, 1 = Cold Cal
	4	Nadir Mode : 0 = Not in Nadir, 1 = Nadir
	5	Cold Cal. Position, LSB
	6	Cold Cal. Position, MSB
MSB	7	0
	DIGITAL BIT	HOUSEKEEPING DATA, BYTE NUMBER 2 DESCRIPTION
LSB	0	0
	1	Scanner A2 Power : 0 = Off, 1 = On.
	2	Scanner Compensator Power : 0 = Off, 1 = On.
	3	0
	4	Survival Heater Power : 0 = Off, 1 = On.
	5	0
	6	0
MSB	7	0
	DIGITAL BIT	HOUSEKEEPING DATA, BYTE NUMBER 3 DESCRIPTION
LSB	0	0
	1	0
	2	0
	3	0
	4	0
	5	0
	6	0
MSB	7	0
	DIGITAL BIT	HOUSEKEEPING DATA, BYTE NUMBER 4 DESCRIPTION
LSB	0	
	1	
	2	
	3	AMSU-A2 Identification Number
	4	(as shown in Table 3.3.3.5/2)
	5	
	6	
MSB	7	

Table 3.3.3.5/1 : AMSU-A2 Housekeeping Data Word Description

AMSU A2 Identification Words		
Unit Number	**Identification No. (Binary)**	**S/N**
Engineering Model A-2	00000010	101 *
Flight Model 1 Module A-2	00001010	103 'I
Flight Model 2 Module A-2	00001110	104 1)
Flight Model 3 Module A-2	00010010	105
Flight Model 4 Module A-2	00010110	106
Flight Model 5 Module A-2	00011010	107
Flight Model 6 Module A-2	00011110	108
Flight Model 7 Module A-2	00100010	109

*: Some analog TLM and internal voltages are slightly different for engineering model.

1) These models are not intended for Meteor Flight

***Table 3.3.3.5/2 : AMSU-A2 Identification* Words**

AMSU A2 Temperature Sensor Assignments	
Number	**Location**
1	scan Motor
2	Feed Horn
3	RF MUX
4	Mixer IF Amplifier Channel 1
5	Mixer IF Amplifier Channel 2
6	Local Oscillator Channel 1
7	Local Oscillator Channel 2
8	Compensation Motor
9	Sub-reflector
10	DC/DC Converter
11	RF Shelf
12	Detector/Pre-amp Assembly
13	Warm load centre
14	Warm load 1
15	warm load 2
16	warm load 3
17	warm load 4
18	Warm load 5
19	Warm load 6

Table 3.3.3.5/3 : AMSU-A2 Temperature Sensor Assignment

3.4. POWER ELECTRICAL INTERFACES

3.4.1. Overview

The AMSU-A2 instrument the following power interfaces :

- A regulated + 28 ***V Main Power Bus with*** high quality power as primary source for the instrument.
- A regulated + 28 ***V Switched TLM Bus*** for powering temperature telemetry.
- A regulated + 28 ***V Pulse Load Bus*** for steppers, heaters... which do not comply with the Main Bus ripple specification.
- A regulated + ***10 V Interface Bus*** for the command, clock, Digital B telemetry and measurement data interface circuits.
- A unregulated ***+21.5 to +37.5 Volt Hearer Power Bus*** continuously operated when the AMSU-A2 is switched off, to supply the AMSU-A2 internal safety heater (see § 3.2.5.).

The + 28 V Main Power Bus, the + 28 V Switched TLM Bus, and the + 28 V Pulse Load Bus are conditioned by the internally redundant Power Conversion Unit (PCU). The +28 V Main Power Bus and the +28 V Pulse Load Bus are individually switched and protected per bus. The +28 V Switched TLM Bus is powered whenever the PCU is on. The Heater Power Bus i switched and protected by the Thermal Conditioning Unit (TCU). The +10 V Interface Bus is provided by the NIU. This is illustrated in Figure 3.4.1-1.

Figure 3.4.1-2 gives details of the AMSU-A2 internal power distribution.

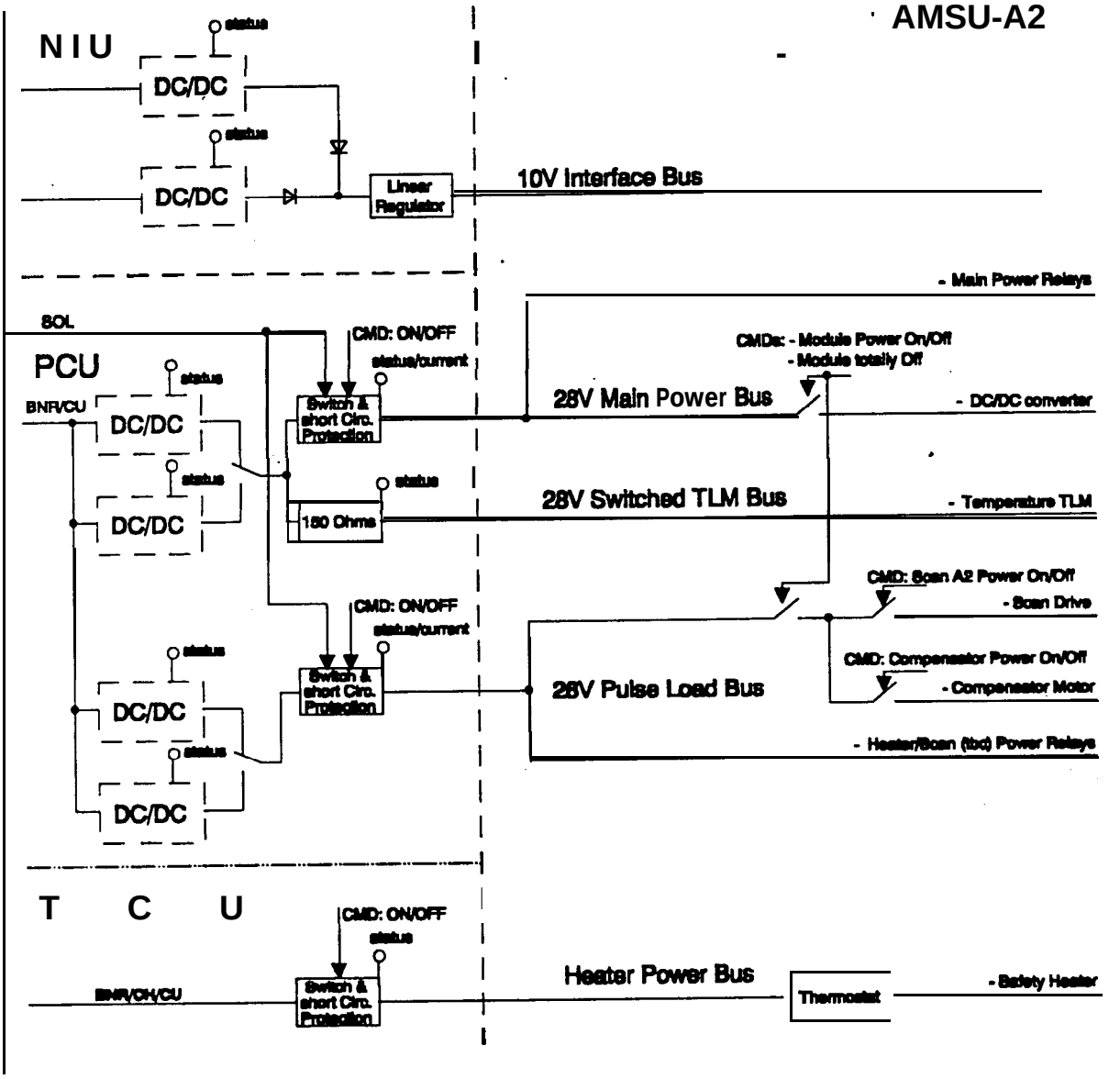

Fig. 3.4.1-I : AMSU-A2 Power Distribution Diagram

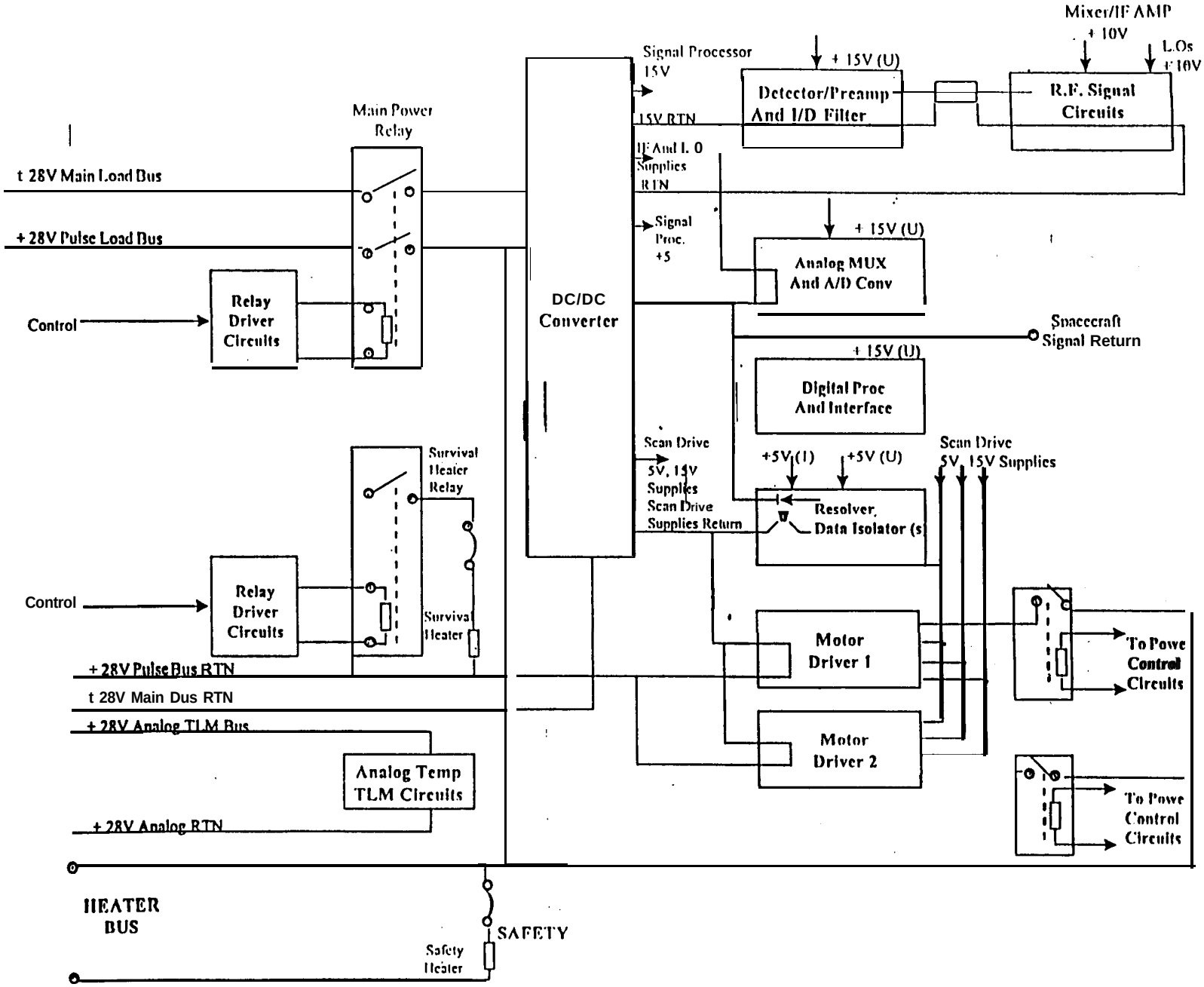

Fig. 3.4.1-2 : AMSU-A2 Internal Power Distribution Diagram

3.4.2. Power Demand

The actual power demands for AMSU-A2 on the individual power busses for BOL & EOL during all modes and required outlet dimensions are defined in Table 3.4.2-l Power Consumption Data Sheet.

Parameter Definitions

Typical Beginning of Life Power

Power expected to be measured during instrument acceptance test, = basic power.

Worst Case End of Life Power

Specified power the instrument shall never exceed (except in case of failure).

Mean Power

Steady state power consumed when the power bus is set at its mean voltage and with a 25 deg. C temperature.

Min. / Max Power

Min. / max. steady state power consumed as a function of power bus input voltage and instrument temperature.

Peak Power

Total power consumed during a peak, i.e. corresponding to an event of finite duration during the considered functional mode. The peak power is given at mean power bus voltage and with a 25 deg. C temperature. The peak power is characterized by a peak duration and / or a peak repetition duty cycle.

Failure Power Consumption

Maximum permanent power that will be consumed without triggering an internal protection or without leading to a fuse blowing.

dP/dV @ 25 deg. C

Mean variation of the consumed power with respect to the input voltage.

Table 3.4.2-l : **Power Consumption Data Sheet**

AMSU-A2

dP/dV @ 25 deg. C

		Typical Beginning of Life (W)						Worst Case End of Life (W)						
Instr. Mode	**Power Rus**	Mean Power	Min. Power	Max. Power	Peak Power	Peak Duration	Peak Duty Cycle	Mean Power	Min. Power	Max. Power	Peak Power	Peak Duration	Peak Duty Cycle	Failure Power
Off Mode	28 V Main Bus	0		-	- -	-		0	-	-	-	-	-	
	28 V Pulse Load	0		-	- -	-		0	-	-	-	-	-	
	28VSwilchcdTMBus					0 / - -	- - -	0 /	-	-	-	-		
		0.153					-	0.2						
	10 V Interface Bus	0						0	. -			-		
	22/37 V Heater Bus	TBD						14						
	TOTAL	*TBD*	-	-	-	-	-	*14 /* *14.2*	-	-	-	-	-	
Meas. Mode and Unique Mode	*28* V Main Bus	~~28.0~~	73					~~29.1~~	24.1					
	28 V Pulse Load	~~12.0~~	10					12.6				-		
	28 V Switched TM Bus	0.15						0.2						
	10 V Interface Bus	0.1						0.1						
	22/37 V Heater Bus	0		-	- -	-		0	-	-	-	-		
	TOTAL .	~~40.25~~	29.25					~~42.0~~	37					

3 In Off Mode, the power consumption on the Switched Temperature Tclemeby bus is 0.2 W when this bus is available al the instrument interface.

3.4.3. Power Electrical Interface Requirements

In order to structure the electrical interfaces, all signals to be controlled by this document will be identified and classified into a certain number of signal types. For each signal type a three character identifier code is given as defined in the corresponding tables. In most cases the power-signal code is identical to the code of the Data Sheet by which the signal is specified.

Table 3.4.3-l shows the power interfaces used by the AMSU-A2 and the corresponding data sheet identifiers.

	Data Sheet Code	Interface Circuit
+28 V Main Power Bus	APB	Fig. 3.4.3.2-l
+28 V Switched TLM **Bus**	BPB	Fig. 3.4.3.2-2
+28 V Pulse Load Bus	'VPB	Fig. 3.4.3.2-3
+10 V **Interface Bus**	DPB	Fig. 3.4.3.2-4
Heater Power Bus	HPB	Fig. 3.4.3.2-S

Table **3.4.3-l :** ***AMSU-A2*** *Power Interfaces*

Within the Power Interface Data Sheets in § 3.4.3.1, the electrical characteristics of the power interfaces are defined.

3.4.3.1. Power Interface Data Sheets

On the following pages the electrical characteristics of the power interfaces are defined with one Data Sheet per signal. In Table 3.4.3-l: 'AMSU-A2 Power Interfaces' and § 3.4.5 'Power Pin Allocation Lists' is referenced to these Data Sheets.

The performances specified in the Data Sheets are maintained during the mission lifetime and under nominal load and temperature range conditions. Source specifications have to be measured at the connector of the source and load specifications have to be measured at the connector of the load unless specified otherwise.

Parameter Definitions

Small Signal Impedance
Output impedance of the power supply tested with, compared to 28V, small AC signals.

Output *Impedance*
Linear output impedance of the power supply.

Voltage Ripple
Sinusoidal voltage ripple, including repetitive spikes and voltage drop caused by the instruments current ripple.

Under-Voltage (incl. ripple & trans.)

The specified voltage range will be considered as under-voltage.

Over-Voltage (incl. ripple & trans.)

The specified voltage range will be considered as over-voltage.

Transients

Positive or negative going, non repetitive spikes caused by load current changes.

Max. Steady-State Current

Maximum power as defined in the Power Consumption Data Sheet divided by the minimum specified nominal voltage.

Current Ripple

Ripple caused by the load pulsed currents (DC/DC converter, stepper motors...).

Inrush Current

Maximum allowed input current for a restricted time, when the load is switched on.

Inrush Current Rate

Rate-of-change of the input current over time when the load is switched 'on'.

Signal Nomenclature	**28 V Main Power Bus**	
Code	**APB**	
EMC Class	Power	
Power **Source Specification:**		
Parameter	**Requirement**	**Remarks**
Voltage	**27.16 ... 28.84 V**	at AMSU-A2 input
Small Signal Impedance	**< 0.3 Ω**	f< **100 kHz, short circuit** protection & line < 0.1 Ω
Voltage Ripple	See § 4.3.1.2.	
Under-Voltage (incl. ripple & trans.)	> 16.00 V ; < 27.16 V	for < 3 s
Over-Voltage (incl. ripple & trans.)	> 28.84 V ; < 38.00 V	for < 50 ms
Transients	See § 4.3.1.2.	
Max. Current	< 6.0 A	Limited by short circuit protection'
Leakage Current	**< 6 mA**	Short circuit protection 'Off'
Load Specification		
Parameter	**Requirement**	**Remarks**
Max. Steady-State Current	**1.0 A**	
Current Ripple	<2% of Max. **Stdy-State Curr.**	**f < 100 kHz**
Inrush Current	< 7.5 A_{op}	Steady- State **after** 300 ms
Inrush Current Rate	< 50 mA/µs	
Harness Design		
Parameter	**Requirement**	**Remarks**
Wiring **Type**	AWG **20, 4P**	

Signal Nomenclature	**+28 V Switched TLM Bus**	
Code	**BPB**	
EMC Class	Power	
Power Source Specification		
Parameter'	**Requirement**	**Remarks**
Voltage	27.16 ... 28.84 V	at AMSU-A2 input [4]
Small Signal Impedance	< 160R	fc 100 kHz
Voltage Ripple	See § 4.3.1.2.	
Under-Voltage (incl. ripple & trans.)	> 16.00 ; < 27.16 V	for < 3 s
Over-Voltage (incl. ripple & trans.)	> 28.84 ; < 38.00 V	for < 50 ms
Transients	See § 4.3.1.2.	
Load Specification:		
Parameter	**Requirement**	**Remarks**
Max. Steady-State Current	5 mA	
Current Ripple	< 1 mA_{pp}	f< 100 kHz
Inrush Current	c 150% of Max Stdy-State Curr.	Steady-State after 30 ms
Harness **Design**		
Parameter	**Requirement**	**Remarks**
Wiring Type	AWG 24, TP	

[4] Measured under no load condition.

Signal Nomenclature	28 V Pulse Load Bus	
Code	VPB	
EMC Class	Power	
Power Source Specification		
Parameter	Requirement	Remarks
Voltage	27 . . . 29 V	at AMSU-A2 input
Small Signal Impedance	c o . 3 Ω	f< 100 kHz, short circuit protection & line < 0.1 Ω
Voltage Ripple	See § 4.3.1.2.	
Under-Voltage (incl. ripple & Trans.)	> 16 ; < 27 V	for < 3 s
Over-Voltage (incl. ripple & trans.)	> 29 ; < 38 V	for < 50 ms
Transients	See § 4.3.1.2.	
Max. Current	c 5.0 A	Limited by short circuit protection
Leakage Current	< 6 mA	Short circuit protection 'Off'
Load Specification		
Parameter	Requirement	Remarks
Max. Steady-State Current	0.45 A	
Current Ripple	< 2.5 A,	f< 100 kHz
Inrush Current	< 7.5 A_{op}	Steady-State after 6 ms
Inrush Current Rate	< 1 A/µs	
Harness Design		
Parameter	Requirement	Remarks
Wiring Type	AWG 20, 4P	

Signal Nomenclature	+10 V Interface Bus	
Code	DPB	
EMC Class	I Power	
Power Source Specification		
Parameter	Requirement	Remarks
Voltage	9.5 . . . 10.5 v	at AMSU-A2 input
Source Current	< 100 mA	
Small Signal Impedance	< 1 Ω	f < 10 MHz
Voltage Ripple	See § 4.3.1.2.	
Under-Voltage (incl. ripple & trans.)	> 9.0 v ; < 9.5 v	
Over-Voltage (incl. ripple & trans.)	> 10.5 v ; < 15 v	
Voltage Transients	See § 4.3.1.2.	
Load Specification		
Parameter	Requirement	Remarks
Max. Steady-State Current	10 mA	
Current Ripple	< 1 mA_{pp}	f < 2.5 MHz
Inrush Current	<125% of Max Stdy-State Cur.	for < 60 ms
Harness Design		
Parameter	Requirement	Remarks
Wiring Type	AWG 24, TP	

Signal Nomenclature	Heater Power Bus	
Code	HPB	
EMC Class	Power	
Power Source Specification		
Parameter	**Requirement**	**Remarks**
Voltage	21.5 . . . 37.5 v	at AMSU-A2 input
Small Signal Impedance	< 0.4 Ω	f < 100 kHz, short circuit protection & line < 0.1 Ω
Max. Current	< 5.0 A	Limited by short circuit protection
Leakage Current	< 6 mA	Short circuit protection 'Off
Load Specification		
Parameter	**Requirement**	**Remarks**
Max. Steady-State Current	0.67 A	
Current Ripple	< 2% of Max. Stdy-State Curr.	f < 100 kHz
Inrush Current Rate	< 2 A/µs	
Harness Design		
Parameter	**Requirement**	**Remarks**
Wiring Type	AWG 20, TP	

3.4.3.2. Power Interface Circuits

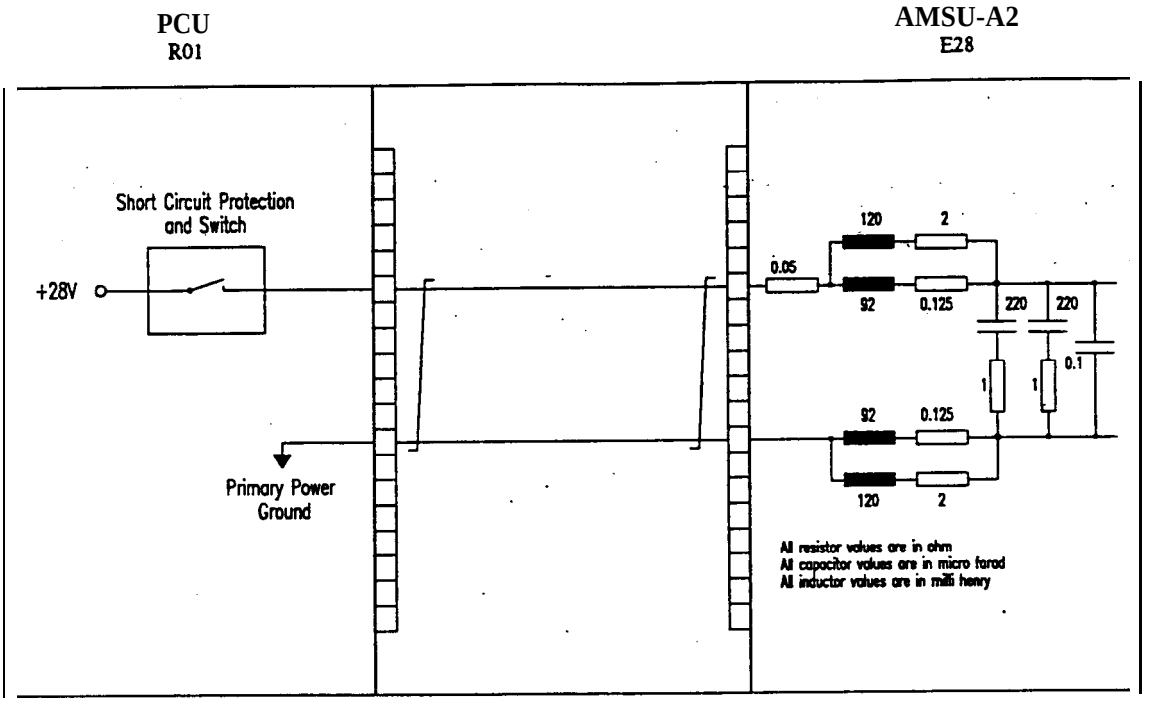

Figure 3.4.3.2-l : +28 V Main Power Bus Interface Circuit

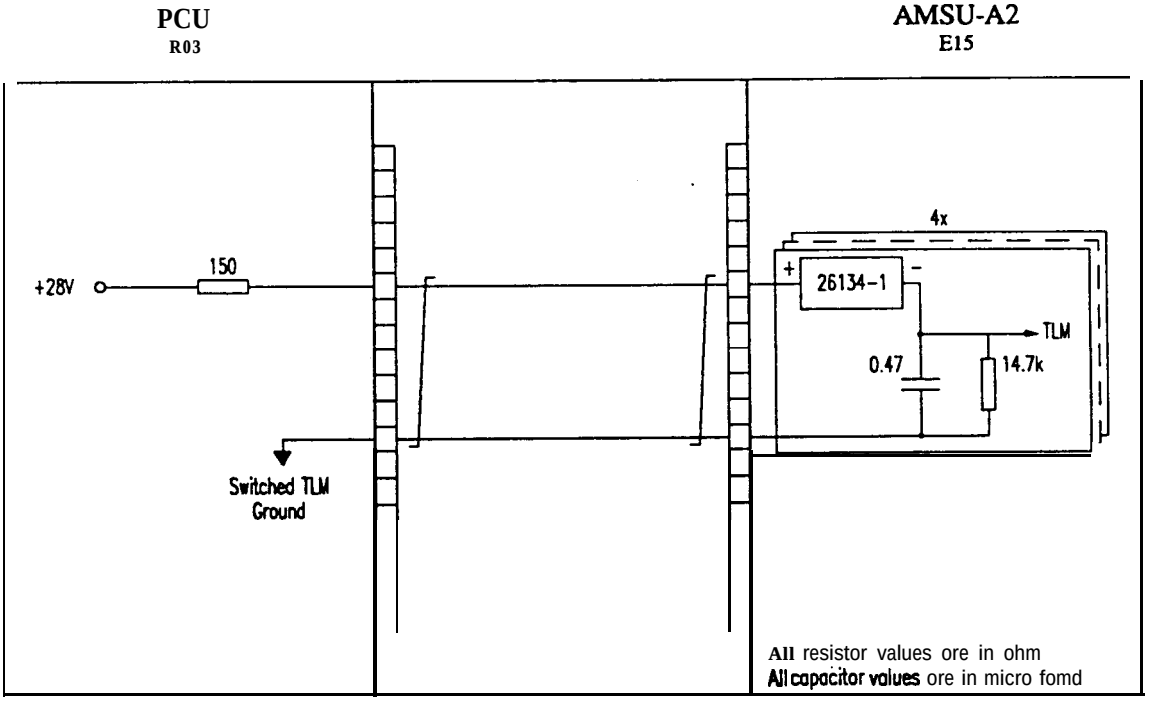

Figure 3.4.3.2-2 : +28 V Switched Telemeby Bus Interface Circuit

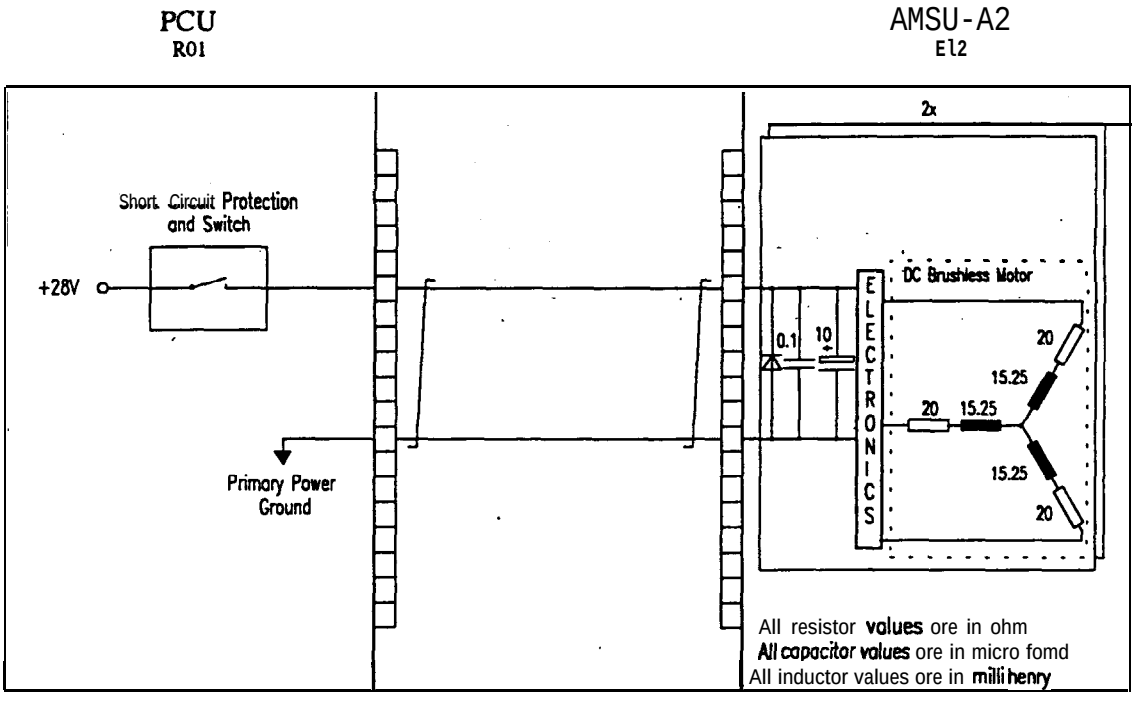

Fig. 3.4.3.2-3 : +28 V Pulse Load Bus Interface Circuit

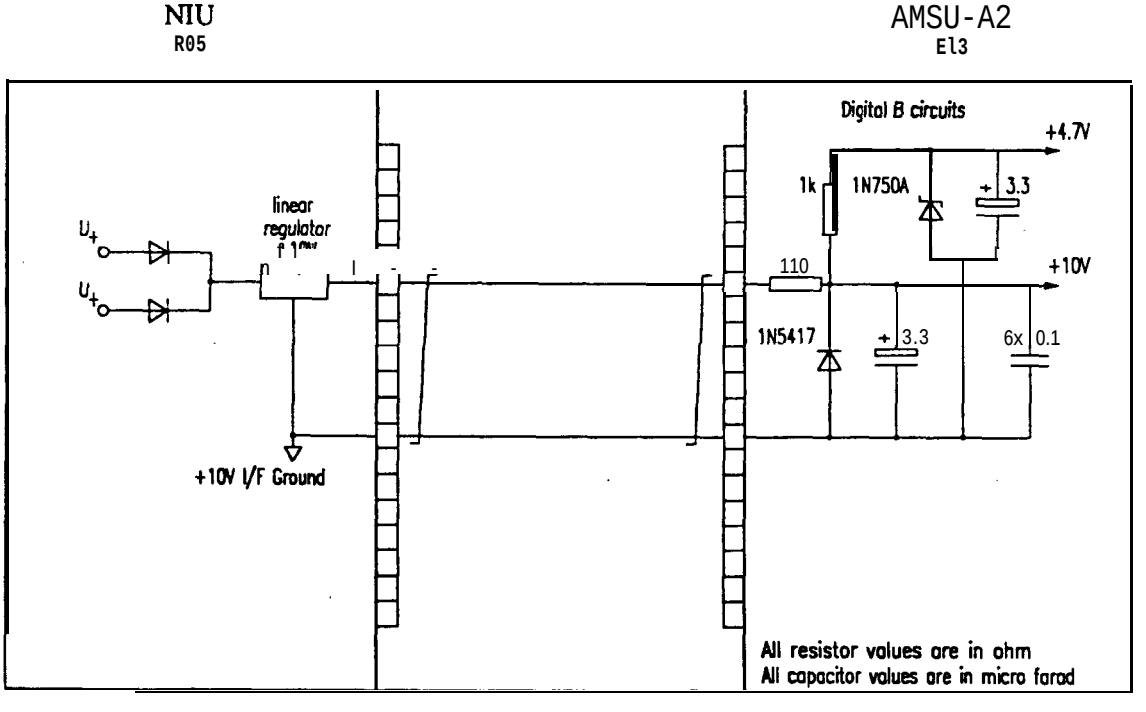

Figure 3.4.3.2-4 : +10 V Interface Bus Interface Circuit

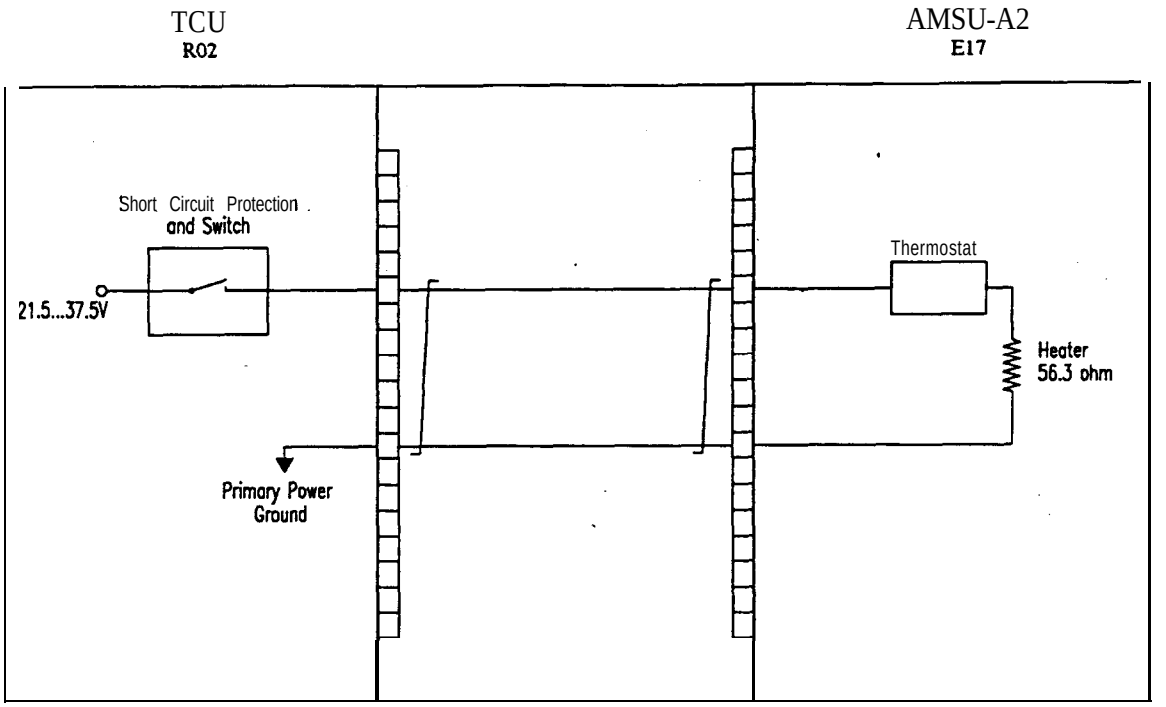

Fig. 3.4.3.2-5 : Heater Power Bus Interface Circuit

3.4.4. Power Connectors

Table 3.4.4-l identifies the power connector types at the AMSU-A2 boxes and Table 3.4.4-2 identifies the power connector types at the AMSU-A2 harness.

Connector	Connector-Type	Function
J01	TD1B25TP *)	Power

*) ITT-Cannon filter pin connector

Table 3.4.4-l : Power Connector Types at AMSU-A2 Boxes

Connector	Connector-Type	Functio
P01	DBMA-25S-NMB	Power

Table 3.4.42 : Power Connector Types at AMSU-A2 Harness

3.4.5. Power Pin Allocation Lists

In these lists, the cross reference between connector pin, signal designation, Interface Data Sheet, target connector and target connector pin is defined and recorded as data base with the *Dornier CAIE Tool* (generation of the electrical interface part of the ICD using computer aided Interface engineering). Per connector one list is prepared.

Interface circuits of a unit are combined with the relevant, interface circuit of the target connector by the CAIE Tool.

Interface Data Sheets can be found in § 3.4.3.1.

The individual pin allocation lists are specified by 9 characters of a alpha numerical connector number. For the AMSU-A2 the first 3 characters are AM2. The 7th character is J for a box connector or P for a harness connector. The last two characters define the connector number.

Since these lists also specify wiring and shielding, they will form the basis for harness manufacturing.

The power connector pin allocations at instrument level are described in Table 3.4.5/1. The power connector harness are described in Table 3.4.5/2.

Connector : 1AM2175J01 Item : AMSU-2 Function : Power Input Backshell : N/A
EMC-Category : 1 Conn.-Type : TD1B25TP

Pin	Signal Designation		Interface-Code Circ	Signal	Pos.	Grouping Ch. ID	Shd	Cable	Twist	Comment	New
01	+28V Main PwrBus AM2	SUP	E28	APBP	-	AB03				Pin 1.2, 14 and 15	
03	+28V Main PwrBus AM2	.RTN	E28	APBP	-	AB03				are shorted at the	
02	+28V Main PwrBus AM2	SUP								P-Connector	
04	+28V Main PwrBus AM2	.RTN									
14	+28V Main PwrBus AM2	SUP			-					Pin 3, 4, 16 and 17	
16	+28V Main PwrBus AM2	.RTN			-					are shorted at the	
15	+28V Main PwrBus AM2	.SUP			-					P-Connector	
17	+28V Main PwrBus AM2	.RTN									
05	+28V Pul LoadBus AM2	SUP	EI2	VPB-	- D	CB02				Pitt 5, 6, 18 and 19	
07	+28V Pul LoadBus AM2	.RTN	EI2	VPB-	- 7	CB02				are shorted at the	
06	+28V Pul LoadBus AM2	SUP								P-Connector	
08	+28V Pul LoadBus AM2	.RTN									
18	+28V Pul LoadBus AM2	SUP								Pin 7, 8, 20 and 21	
20	+28V Pul LoadBus AM2	.RTN								are shorted at the	
19	+28V Pul LoadBus AM2	SUP								P-Connector	
21	+28V Pul LoadBus AM2	.RTN									
09	+28V Swt TLM Bus AM2	S W	E15	BPB-	- D	BB02				Pin 9 and 22	
10	+28V Swt TLM Bus AM2	.RTN	E15	BPB-	- 7	BB02				Pin 10 and 23	
22	+28V Swt TLM Bus AM2	SUP								are shorted each at	
23	+28V Swt TLM Bus AM2	.RTN								the P-Connector	
24	Safety Htr Pwr AM2	.SUP	EI7	HPB							
25	Safety Htr Pwr AM2	.RTN	317	HPB							
11	XC	.-									
12	NC	.-									
13	Chassis Gnd AM2	.-									

Table 3.4.5/1 : Pin Allocation List of Connector J01

Connector : IAM2175P01 Item : AMSU-2 Function : Power Input Corm.-Type : DBMA-25S-NMB
EMC-Category : 1 Location : 175 Backshell : TBD

Pin	Signal Designation		Interlace-Code Circ	Signal	Pm.	Grouping Ch. ID	Wiring	Shd	Cable	Twist	Comment	End-It.	Loc.	Connector	Pin	Ntw
01	+28V Main PwrBus AM2	.SUP	E28	APBP		AB03	TP-20				Pin 1.2, 14 and 15	PCU	230	PCU230 Pxx		
03	+28V Main PwrBus AM2	.RTN	E28	APBP		AB03	TP-20				are shorted at the	PCU	230	PCU230 Pxx		
02	+28V Main PwrBus AM2	.SUP									P-Connector					
04	+28V Main PwrBus AM2	.RTN														
14	+28V Main PwrBus AM2	.SUP									Pin 3, 4, 16 and 17					
16	+28V Main PwrBus AM2	.RTN									are shorted at the					
15	+28V Main PwrBus AM2	.SUP									P-Connector					
17	+28V Main PwrBus AM2	.RTN			-											
05	+28V Pul LoadBus AM2	.SUP	EI2	VPB-	- D	CB02	TP-20				Pin 5, 6, 18 and 19	PCU	230	PCU230 Pxx		
07	+28V Pul LoadBus AM2	.RTN	EI2	VPB-	- 7	CB02	TP-20				are shorted at the	PCU	230	PCU230 Pxx		
06	+28V Pul LoadBus AM2	.SUP									P-Connector					
OR	+28V Pul LoadBus AM2	.RTN														
18	+28V Pul LoadBus AM2	.SUP									Pin 7, 8, 20 and 21					
20	+28V Pul LoadBus AM2	.RTN									are shorted at the					
19	+28V Pul LoadBus AM2	.SUP									P-Connector					
21	+28V Pul LoadBus AM2	.RTN														
09	+28V Swt TLM Bus AM2	.SUP	E15	BPB-	- D	BB02	TP-24				Pio 9 and 22	PCU	230	PCU230 Pxx		
IO	+28V Swt TLM Bus AM2	.RTN	E15	BPB-	- 7	BB02	TP-24				Pio IO and 23	PCU	230	PCU230 Pxx		
22	+28V Swt TLM Bus AM2	.SUP									are shorted each at					
23	+28V Swt TLM Bus AM2	.RTN									the P-Connector					
24	Safety Htr Pwr AM2	SUP	E17	HPB	D		TP-20					TCU	230	TCU230 Pxx		
25	Safety Htr Pwr AM2	.RTN	E17	HPB	7		TP-20					TCU	230	TCU230 Pxx		
11	NC	.-														
12	NC	.-														
13	Chassis Gnd AM2	.-														

*Table **3.4.5/2:** Pin Allocation List of Connector **P01***

(For Information Only)

3.5. SIGNAL ELECTRICAL INTERFACES

3.51. Overview

An overview on the signal electrical interfaces between PLM and AMSU-A2 is presented in Fig. 3.5-l.

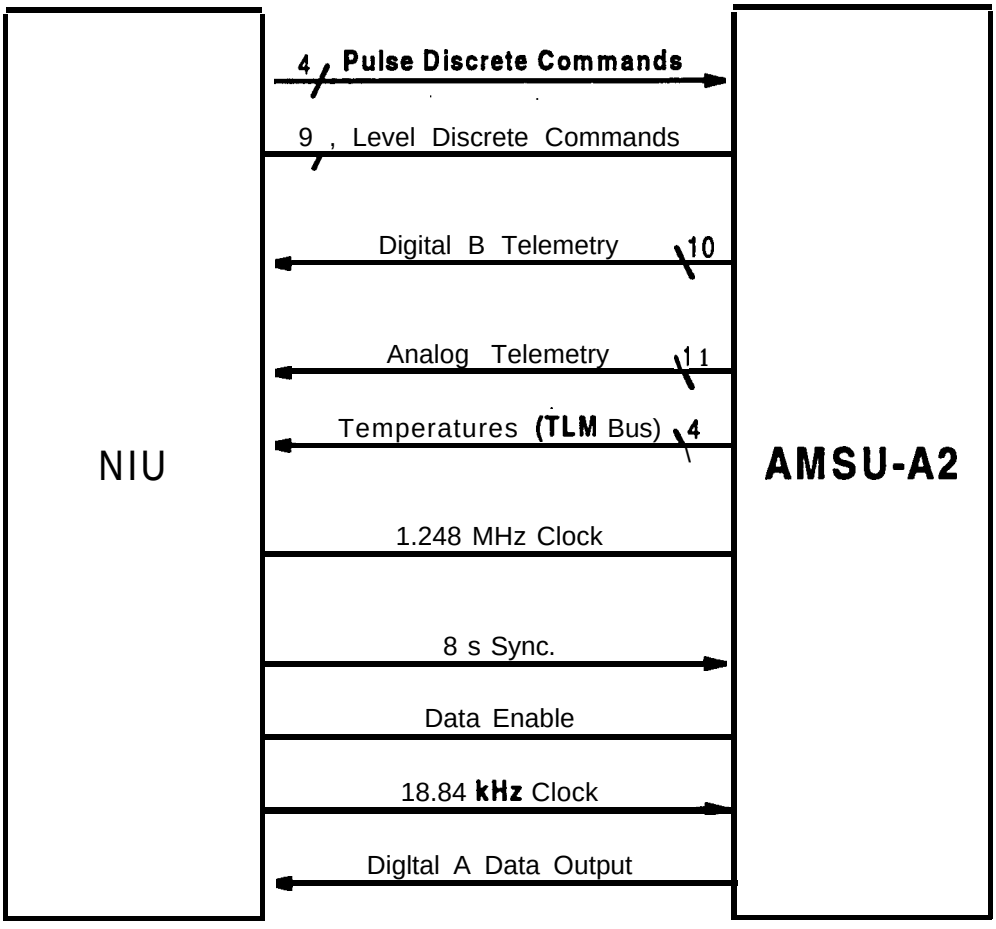

Fig. 3.5-l : Signal Electrical Interfaces PLM-⇔ AMSU-A2

3.5.2. Signal Electrical Interface Requirements

Table 3.5.2-l lists all signals of the AMSU-A2 signal electrical interfaces and gives references to the Interface Data Sheets in § 3.5.2.1 as well as the interface circuits in § 352.2.

Table 3.5.2-l : ***Signal to Data Sheets & Interface Circuits Assignments (1/2)***

Signal	Data Sheet Code	Interface Circuit	Remarks
Module Power Disconnect AMSU-A2 Module Power Connect AMSU-A2 Survival Heater Power Off AMSU-A2 Survival Heater Power On AMSU-A2	CCP	Fig. 3.5.2.2-l	Pulse Discrete Commands
Module Totally Off AMSU-A2 Scanner A2 Power AMSU-A2 Compensation Motor Power AMSU-A2 Warm Cal. Pos. AMSU-A2 Cold Cal. Pos. AMSU-A2 Antenna Nadir Pos. AMSU-A2 Full Scan AMSU-A2 Cold Cal. Position MSB AMSU-A2 Cold Cal. Position LSB AMSU-A2	CCL	Fig. 3.5.2.2-l	Level Discrete commands
Module Power TLM AMSU-A2 Survival Heater TLM AMSU-A2 Compensator Motor TLM AMSU-A2 Scanner A2 TLM AMSU-A2 Warm Cal. Pos. TLM AMSU-A2 Cold Cal. Pos. TLM AMSU-A2 Antenna Nadir TLM AMSU-A2 Full Scan TLM AMSU-A2 Cold Cal. Pos. MSB TLM AMSU-A2 Cold Cal. Pos. LSB TLM AMSU-A2	TLD	Fig. 3.5.2.2-2	Digital B HK Telemetry
RF Shelf A2 Temp. AMSU-A2 A2 Scan Motor Temp. AMSU-A2 Compensator Motor Temp. AMSU-A2 Warm Load A2 Temp. AMSU-A2	TLA	Fig. 3.5.2.2-3	Temperatures (Switched TLM Bus)
A2 Drive Motor Current AMSU-A2 Compensator Motor Current AMSU-A2		Fig. 3.5.2.2-4	Analog HK Telemetry
• 15 VDC (Antenna Drive) AMSU-A2 -15 VDC (Signal Process.) AMSU-A2		Rg. 3.5.2.2-5	

Table 3.5.2-1 : Signal to Data Sheets & Interface Circuits Assignments (21/2)

Signal	Data Sheet Code	Interface Circuit	Remarks
+15 VDC (Antenna Drive) *AMSU-A2* +5 VDC (Antenna Drive)AMSU-A2 +15 VDC (Signal Process.) AMSU-A2 +5 VDC (Signal Process.) AMSU-A2 +10 VDC (Receiver) AMSU-A2 +10 VDC LO Ch 1 (23.8 GHz) AMSU-A2 +10 VDC LO Ch 2 (31.4 GHz) AMSU-A2	TLA	Fig. 3.5.2.2-6	Analog HK Telemetry
1.248 MHz Clock AMSU-A2	CLR	Fig. 3.5.2.2-7	Timing : see Fig. 3.2.6.1-1
8 sec Sync AMSU-A2	SYV	Fig. 3.5.2.2-8	liming see § 3.3 Measurement Data
Data Enable AMSU-A2	DEM		
16.64 kHz Clock AMSU-A2	CLT		
Data Output AMSU-A2	DOA		

3.5.2.1. Signal Electrical Interface Data Sheets

On the following pages the electrical characteristics of the signal electrical interfaces are defined with one Data Sheet per signal. In § 3.5.2 Signal Electrical Interface Requirements' and § 3.5.4 'Signal Pin Allocation Lists' is referenced to these Data Sheets.

The performances **specified** in the Data Sheets are maintained during the mission lifetime and under nominal load and temperature range conditions. Source specifications have to be measured at the connector of the source and load specifications have to be measured at the connector of the load unless specified otherwise.

The Fault Voltage Protection is the maximum externally induced voltage that the specified input or output can withstand without damage. The Fault Voltage Emissions is the maximum internally generated voltage that the specified input or output can create under worst case fault conditions.

Signal Nomenclature	Pulse Discrete Commands (Short)	
Code	CCP	
EMC Class	Signal	
Source Circuit Specification		
Parameter	Requirement	Remarks
'1' - Level / 'TRUE	-0.2 ... +0.2 v	line to IO V l/F ground
'0' - Level / 'FALSE' (V_{OH})	+9.3 . . . +10.7 v	line to IO V I/F ground
Rise Time 10% to 90%	c 12 µs	cable length c 5 m
Fall Time 90% to 10%	< 12 µs	cable length < 5 m
Pulse Duration	55 ... 65 ms	'I' - Level
Output Impedance	< 1.5 kΩ	R (CMOS output) + 200 Ω
Source Current	> l m A	@ V_{OH} = 9.5 V
Fault Voltage Emissions	0 V ... V_{DD}	R_S > 100 Ω
Fault Voltage Protection	-0.5 V ... V_{DD} + 0.5 V	V_{DD} see Note
Load Circuit Specification		
Parameter	Requirement	Remarks
1' - Level	-0.5 . . . +2 v	line to 10 V I/F ground
'0' - Level	+8.0 . . . +10.8 V	line to 10 V I/F ground
Sink Current	< 1 mA	
Input Impedance	> 90 kΩ	
Fault Voltage Emissions	0 V . . . V_{DD}	R_S > 2 kΩ
Fault Voltage Protection	-0.5 V . . . V_{DD} + 0.5 V	V_{DD} see Note
Harness Design		
Parameter	Requirement	Remarks
Wiring Type	AWG 24, single line	return via +10 V I/F ground

Note : V_{DD} is the common supply voltage for the source and the load circuit.
Definition of V_{DD} : see Data Sheet '+ IO V Interface Bus - DPB' in § 3.4.3.1.

Signal Nomenclature	Level Discrete Commands	
Code	CCL	
EMC Class	Signal	
Source Circuit Specification		
Parameter	**Requirement**	**Remarks**
'1' - Level / 'TRUE'	-0.2 . . . +0.2 v	Line to 10, V I/F ground
'0' - Level / 'FALSE' (V_{OH})	+9.3 . . . +10.7 V	line to 10 V I/F ground
Rise Time 10% to 90%	< 12 µs	cable length < 5 m
Fall Time 90% to 10%	< 12 µs	cable length < 5 m
Output Impedance	< 1.5 kΩ	R (CMOS output) + 200 Ω
Source Current	>1mA	@ V_{OH} = 9.5 V
Fault Voltage Emissions	0 V . . . V_{DD}	R_S > 100 Ω
Fault Voltage Protection	-0.5 V . . . V_{DD} + 0.5 V	V_{DD} defined in Data Sheet CCP
Load Circuit Specification		
Parameter	**Requirement**	**Remarks**
'1' - Level	-0.5 . . . +2 v	line to 10 V I/F ground
'0' - Level	+8.0 . . . +10.8 V	line to 10 V I/F ground
Sink Current	< 1 mA	
Input Impedance	> 90 kΩ	
Fault Voltage Emissions	0 V . . . V_{DD}	R_S > 2 kΩ
Fault Voltage Protection	-0.5 V . . . V_{DD} + 0.5 V	V_{DD} defined in Data Sheet CCP
Harness Design		
Parameter	**Requirement**	**Remarks**
Wiring Type	AWG 24, single line	return via + 10 V I/F ground

Signal Nomenclature	Digital B Telemetry	
Code	TLD	
EMC Class	Signal	
Source Circuit Specification		
Parameter	Requirement	Remarks
'1' -Level	-0.1 . . . +0.5 v	Ground reference
'0' - Level	+3.5 ... +5.7 V	See interface circuit
Spectral Frequency Range	0... 200 Hz	for f > 200 Hz filter required ; sampling rate see under Load
Output Impedance	2 kΩ . . . 15 kΩ	
Source Current	> 60 µA	
Fault Voltage Emissions	-15 . . . +15 v	Rs > 0.2 kΩ
Fault Voltage Protection	-15 . . . +15 v	R_S > 0.2 kΩ
Load Circuit Specification		
Parameter	**Requirement**	**Remarks**
'1' - Level	-0.2 . . . +0.8 V	line to 10 V I/F ground
'0' - Level	+3.0 . . . +5.7 v	line to 10 V I/F ground
Sink Current	< 60 µA	
Sampling Rate	0.125 . . . 16 s	
Input Impedance	> 100 kΩ	
Fault Voltage Emissions	-15 . . . +15 v	R_S > 0.2 kΩ
Fault Voltage Protection	-15 . . . +15 v	
Harness Design		
Parameter	**Requirement**	**Remarks**
Wiring Type	AWG 24, single line	return via 10 V I/F Ground

Signal Nomenclature	Analog HK Telemetry	
Code	TLA	
EMC Class	Signal	
Source Circuit Specification		
Parameter	**Requirement**	**Remarks**
Voltage Range	0 . . . 5.12 v	load > 2 MΩ
Spectral Frequency Range	0 ... 200 Hz	for f > 200 Hz filter required ; sampling rate see under Load
Output Impedance	2 kΩ ... 15 kΩ	
Source Current	> 3 µA	
Fault Voltage Emissions	-15 . . . +15 v	R_S > 2 kΩ
Fault Voltage Protection	-15 . . . +15 v	R_S > 2 kΩ
Load Circuit Specification		
Parameter	**Requirement**	**Remarks**
Input Voltage Range	0 ... 5.12 V	Line to return
Sampling Rate	0.125 . . . 16 s	
Conversion Resolution	8 bit	20 mV/LSB
Measurement Accuracy	20mV	
Sink Current	< 3 µA	
Input Impedance	> 2 MΩ	
Fault Voltage Emissions	-15 . . . +15 v	R_S > 2 kΩ
Fault Voltage Protection	-15 . . . +15 v	
Harness Design		
Parameter	**Requirement**	**Remarks**
Wiring Type	AWG 24, Single Line	Return via Signal Ground or Sw. TLM Ground (See I/F Circuit)

Signal Nomenclature	1.248 MHz Clock	
Code	CLR	
EMC Class	RF	
Source Circuit Specification		
Parameter	Requirement	Remarks
Low Level	-0.2 . . . +0.2 v	line to 10 V I/F ground
High Level (V_{OH})	+9.3 . . . +10.7 v	line to 10 V I/F ground
Frequency (initial setting)	1.248 MHz $\pm 1.10^{-6}$	square wave
Stability	$< 5.\ 10^{-9}$ / sec	
Frequency Drift per Week	$< 5.10^{-6}$	over temperature range
Frequency Drift per Year	$< 1.10^{-6}$	atconstanttemperature
Rise Time 10% to 90%	< 60 ns	cable length < 5 m
Clock Symmetry	> 82 %	see figure below
Output Impedance	c 120R	CMOS buffer output
Source Current	> 2.8 mA	@ V_{OH} = 9.5 V
Fault Voltage Emissions	0 V . . . V_{DD}	R_S > 100 Ω
Fault Voltage Protection	-0.5 V . . . V_{DD} + 0.5 V	V_{DD} defined in Data Sheet CCP
Load Circuit Specification		
Parameter	Requirement	Remarks
Low Level	-0.5 . . . +2.0 v	line to 10 V I/F ground
High Level (V_{IH})	+8.0 . . . +10.8 V	line to 10 V I/F ground
Sink Current	< 1 mA	
Input Impedance	> 90 kΩ	
Fault Voltage Emissions	0 V . . . V_{DD}	R_S > 2 kΩ
Fault Voltage Protection	-0.5 V . . . V_{DD} + 0.5 V	V_{DD} defined in Data Sheet CCP
Harness Design		
Parameter	Requirement	Remarks
Wiring Type	Double shielded cable	See Fig. 3.5.2.2-7.

Symmetry

A / B x 100 % if B > A

B/Ax 100% if A > B

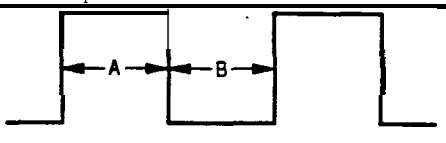

Signal Nomenclature	8 s Sync.	
Code	SYV	
EMC Class	Signal	
Source Circuit Specification		
Parameter	Requirement	Remarks
'1' - Level	-0.2.... +0.2 v	line to 10 V I/F ground
'0' - Level (V_{OH})	+9.3 . . . +10.7 v	line to 10 V I/F ground
Repetition Rate	8 s	tolerances : see Table 3.3.2-1
Stability	tolerances :see Table 3.3.2-l	
Pulse Width	240.4 µs ± 1.7 µs	at '1' - Level
Rise Time 10% to 90%	< 2 µs	cable length < 5 m
Fall Time 90% to 10%	< 2 µs	cable length < 5 m
Output Impedance	< 1.5 kΩ	R (CMOS output) + 200 Ω
Source Current	> 1 mA	@ V_{OH} = 9.5 v
Fault Voltage Emissions	0 V . . . V_{DD}	R_S > 100 Ω
Fault Voltage Protection	-0.5 v . . . V_{DD} + 0.5 v	V_{DD} defined in Data Sheet CCP
Load Circuit Specification		
Parameter	Requirement	Remarks
'1' - Level	-0.5 . . . +2 v	line to 10 V I/F ground
'0' - Level	+8.0 . . . +10.8 V	line to 10 V I/F ground
Sink Current	< 1 mA	
Input Impedance	> 90 kΩ	
Fault Voltage Emissions	0 V . . . V_{DD}	R_S > 2 kΩ
Fault Voltage Protection	-0.5 V . . . V_{DD} + 0.5 V	V_{DD} defined in Data Sheet CCP
Harness Design		
Parameter	Requirement	Remarks
Wiring Type	AWG 24, single line	return via +10 V I/F ground

Signal Nomenclature	Data Enable	
Code	DEM	
EMC Class	Signal	
Source Circuit Specification		
Parameter	**Requirement**	**Remarks**
'1' - Level	-0.2 . . . +0.2 v	line to 10 V I/F ground
'0' - Level (V_{OH})	+9.3 . . . +10.7 v	line to 10 V I/F ground
Number of Samples	7 per 100 ms	
Stability	Derived from 16.64 kHz clock	See Data Sheets CLT / CLR
Pulse Width	(79/5) x (1/1 6.64 kHz Clock)	at '1' - Level
Rise Time 10% to 90%	< 2 µs	cable length < 5 m
Fall Time 90% to 10%	< 2 µs	cable length < 5 m
Output Impedance	< 1.5 kΩ	R (CMOS output) + 200 Ω
Source Current	> 1 mA	@ V_{OH} = 9.5 v
Fault Voltage Emissions	0 v . . . V_{DD}	R_S > 100 Ω
Fault Voltage Protection	-0.5 v . . . V_{DD} + 0.5 v	V_{DD} defined in Data Sheet CCP
Load Circuit Specification		
Parameter	**Requirement**	**Remarks**
'1' - Level	-0.5 . . . +2 v	line to 10 V I/F ground
'0' - Level	+8.0 . . . +10.8 V	line to 10 V I/F ground
Sink Current	< 1 mA	
Input Impedance	> 90 kΩ	
Fault Voltage Emissions	0 v . . . V_{DD}	R_S > 2 kΩ
Fault Voltage Protection	-0.5 v . . . V_{DD} + 0.5 v	V_{DD} defined in Data Sheet CCP
Harness Design		
Parameter	Requirement	Remarks
wiling Type	AWG 24, single line	return via 10 V I/F ground

Signal Nomenclature	16.64 kHz Clock	
Code	CLT	
EMC Class	Signal	
Source Circuit Specification		
Parameter	Requirement	Remarks
'1' - Level	-0.2 . . . +0.2 v	line to 10 V I/F ground
'0' - Level (V_{OH})	+9.3 . . . +10.7 v	line to 10 V I/F ground
Repetition Rate	16.64 kpps	Tolerance depends on 1.248 MHz clock
'Stability	Derived from 1.248 MHz clock	See Data Sheet CLR
Pulse Width	12 µs ± 1.7 µs	at '1' - Level
Rise Tiie 10% to 90%	< 2 µs	cable length < 5 m
Fall Time 90% to 10%	< 2 µs	cable length < 5 m
output Impedance	< 1.5 kΩ	R (CMOS output) + 200 Ω
Source Current	> 1 mA	@ V_{OH} = 9.5 V
Fault Voltage Emissions	0 V ... V_{DD}	R_S > 100 Ω
Fault Voltage Protection	-0.5 V . . . V_{DD} + 0.5 V	V_{DD} defined in Data Sheet CCP
Load Circuit Specification		
Parameter	Requirement	Remarks
'1' - Level	-0.5 . . . +2 v	line to 10 V I/F ground
'0' - Level	+8.0 . . . +10.8 V	line to 10 V I/F ground
Sink Current	< 1 mA	
Input Impedance	> 90 kΩ	
Fault Voltage Emissions	0 V . . . V_{DD}	R_S > 2 kΩ
Fault Voltage Protection	-0.5 V . . . V_{DD} + 0.5 V	V_{DD} defined in Data Sheet CCP
Harness Design		
Parameter	Requirement	Remarks
Wiring Type	AWG 24, single line	line to 10 V I/F ground

Signal Nomenclature	Data Output	
Code	DOA	
EMC Class	Signal	
Source Circuit Specification		
Parameter	**Requirement**	**Remarks**
'1' - Level	-0.2 ... +0.2 V	line to 10 V I/F ground
'0' - Level (V_{OH})	+9.3 ... +10.7 V	line to 10 V I/F ground
Data Word Rate (Burst)	7 x 16-bit words per 100 ms	
Rise Time 10% to 90%	< 2 µs	cable length < 5 m
Fall Time 90% to 10%	< 2 µs	cable length < 5 m
Output Impedance	< 1.5 kΩ	R (CMOS output) + 200 Ω
Source Current	> 1 mA	@ V_{OH} = 9.5 V
Fault Voltage Emissions	0 V ... V_{DD}	R_S > 100 Ω
Fault Voltage Protection	-0.5 V ... V_{DD} + 0.5 V	V_{DD} defined in Data Sheet CCP
Load Circuit Specification		
Parameter	**Requirement**	**Remarks**
'1' - Level	-0.5 ... +2 V	line to 10 V I/F ground
'0' - Level	+8.0 ... +10.8 V	line to 10 V I/F ground
Sink Current	< 1 mA	
Input Impedance	> 90 kΩ	
Fault Voltage Emissions	0 V ... V_{DD}	R_S > 2 kΩ
Fault Voltage Protection	-0.5 V ... V_{DD} + 0.5 V	V_{DD} defined in Data Sheet CCP
Harness Design		
Parameter	**Requirement**	**Remarks**
Wiring Type	AWG 24, single line	return via 10 V I/F ground

3.5.2.2. Signal Electrical Interface Circuits

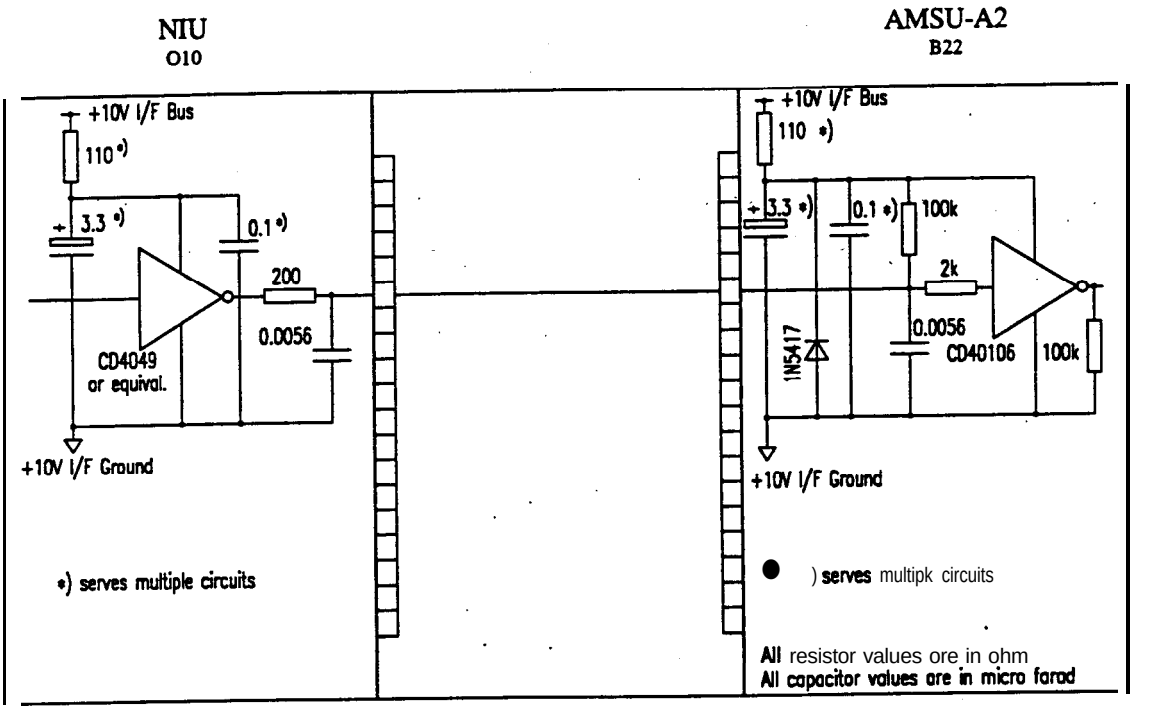

*Fig. 3.5.2.2-I : **AMSU-A2 Pulse / Level** Discrete **Commands Interface** Circuit*

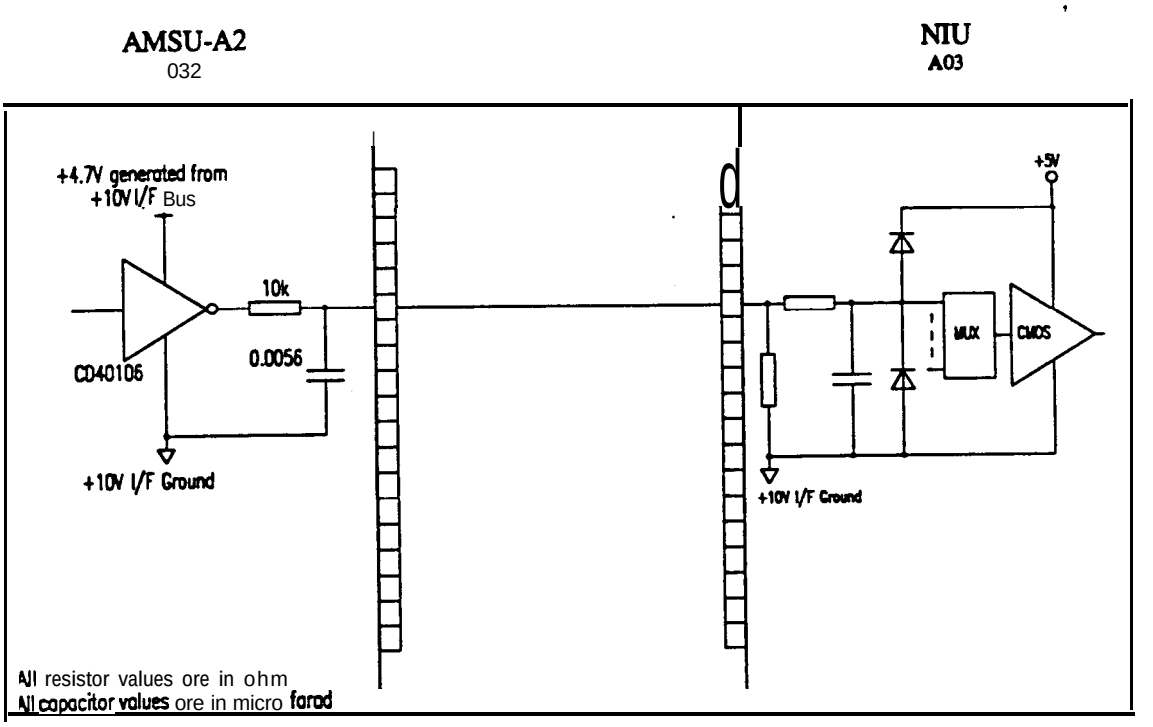

Fig. 3.5.2.2-2 : AMSU-A2 Typical Digital B Telemetry Interface Circuit

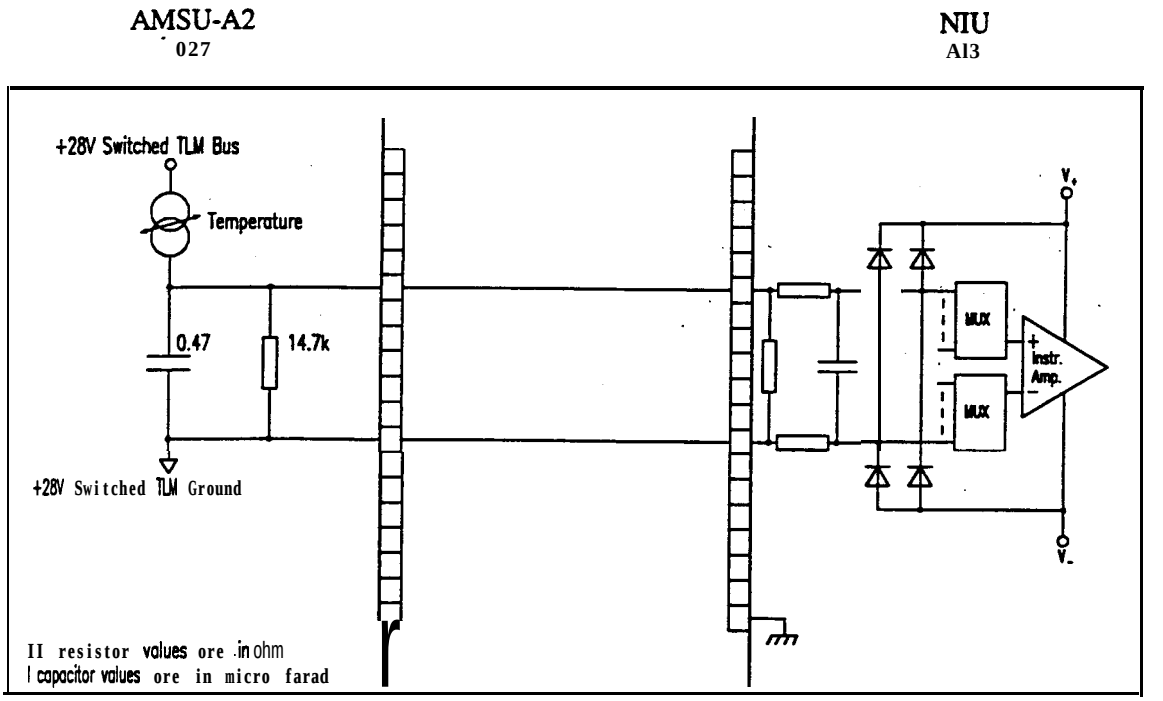

Only one +28 V Switched TLM Ground line is provided from AMSU-A2 for all interfaces.

Fig. 3.5.2.2-3 : AMSU-A2 *Temperature* ***Telemetry Interface*** *Circuit*

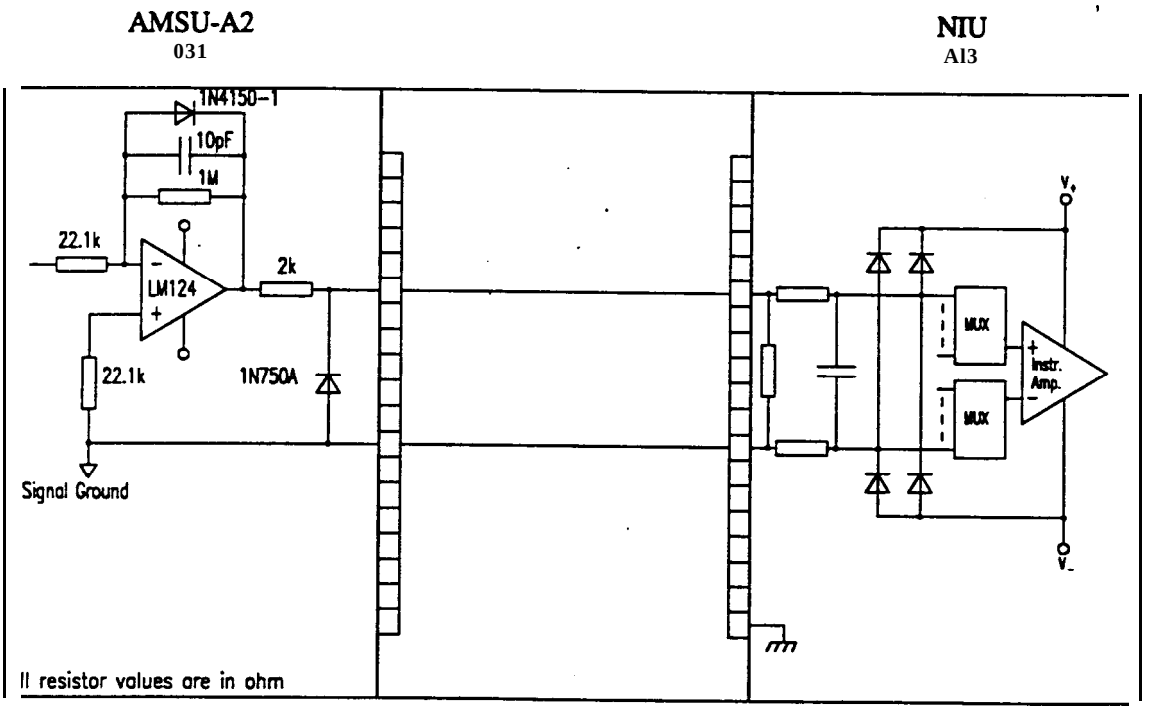

Only one Signal Ground line is provided from AMSU-A2 for all interfaces.

Fig. 3.5.2.2-4 ***: AMSU-A2*** *Motor Current* ***Telemetry Interface*** *Circuit*

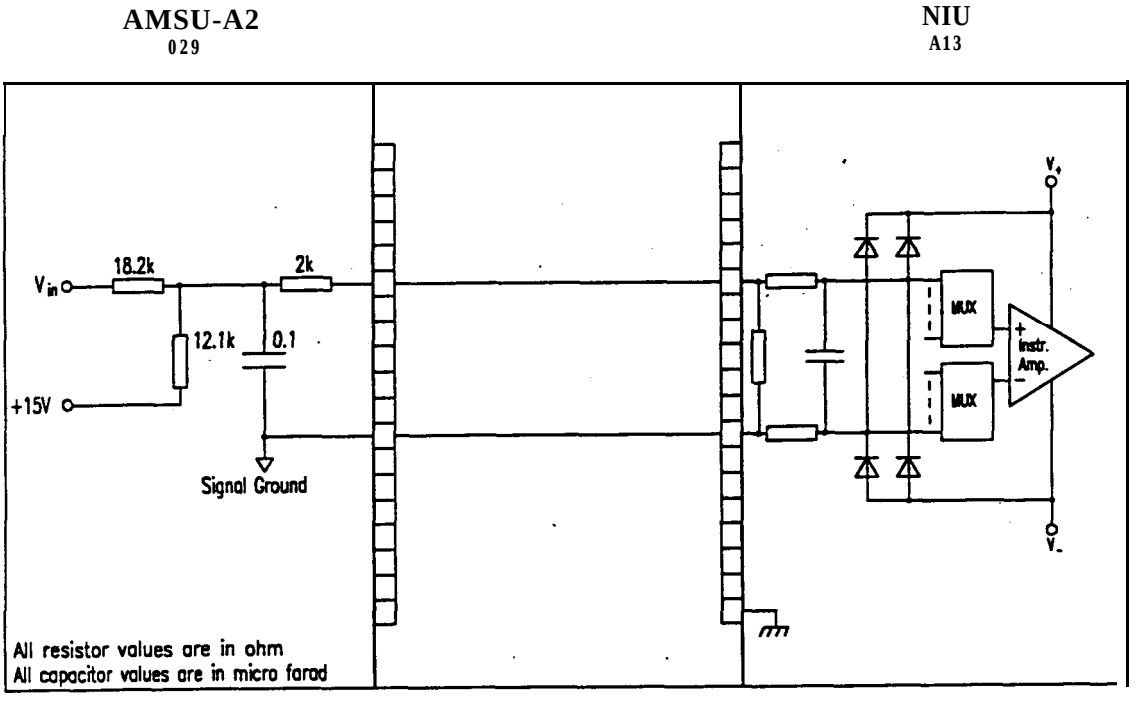

Only one Signal Ground line is provided from AMSU-A2 for all interfaces.

*Fig. 3.5.2.2-S : **AMSU-A2** Negative Voltage **Telemetry Interface Circuit***

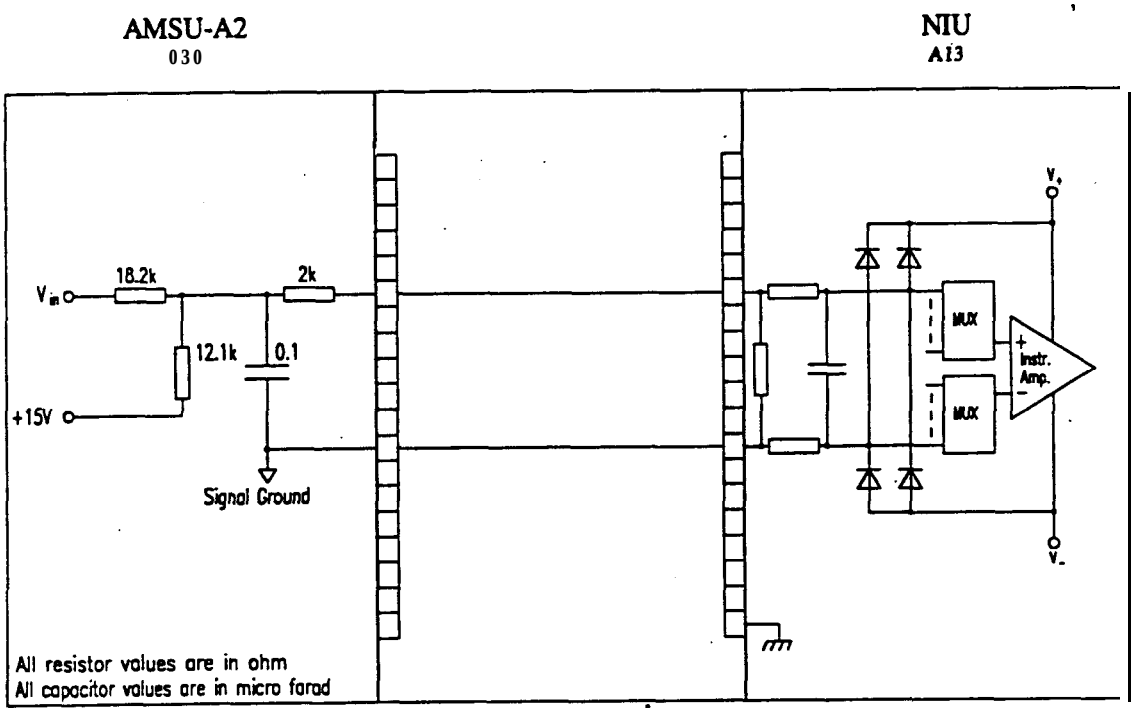

Only one Signal Ground line is provided from AMSU-A2 for all interfaces.

*Fig. 3.5.2.2-6 : AMSV-A2 Positive Voltage **Telemetry Interface** Circuit*

TLM Signal	R_1	R_2
+15 VDC (Antenna Drive) AMSU-A2	18.2 kΩ	5.49 kΩ
+5 VDC (Antenna Drive) AMSU-A2	10.0 kΩ	15.0 kΩ
+15 VDC (Signal Process.) AMSU-A2	18.2 kΩ	5.49 kΩ
+5 VDC (Signal Process.) AMSU-A2	10.0 kΩ	15.0 kΩ
+10 VDC (Receiver) AMSU-A2	15.0 kΩ	8.06 kΩ
+10 VDC LO Ch l(23.8 GHz) AMSU-A2	15.0 kΩ	8.06 kΩ
+10 VDC LO Ch 2 (31.4 GHz) AMSU-A2	15.0 kΩ	8.06 kΩ

Table 3.5.2.2-I : ***Resistors for Positive Voltage Telemetry Interface Circuit***

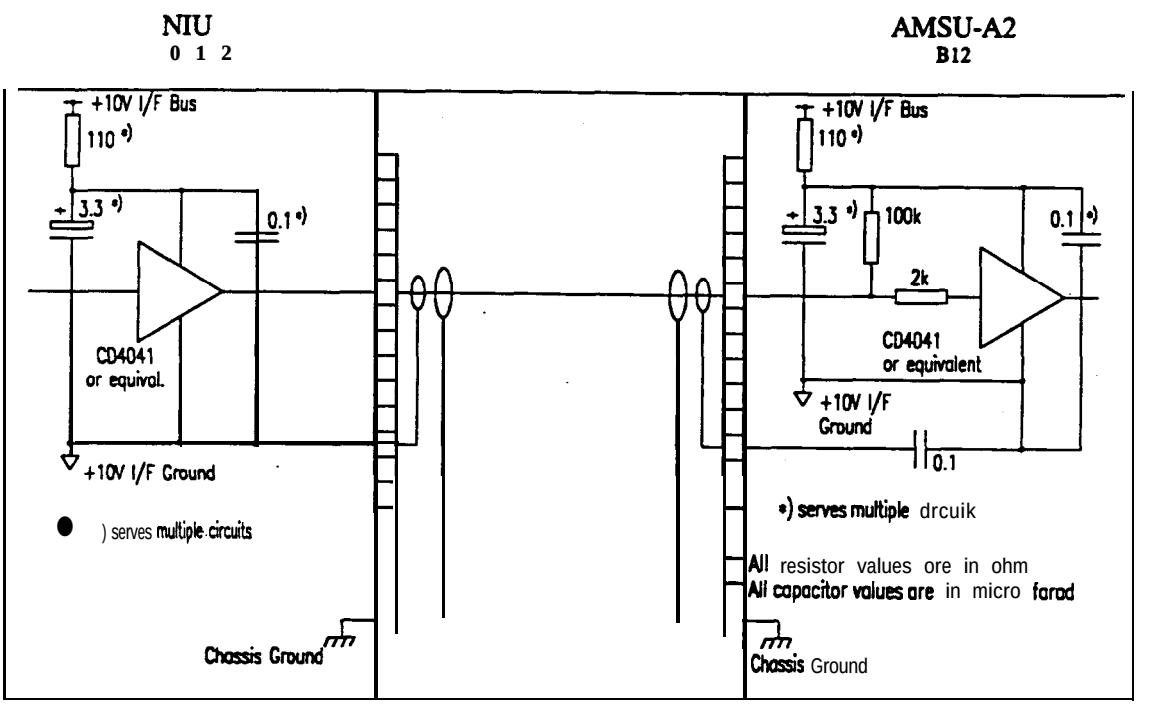

Fig. 3.5.2.2-7 : 1.248 MHz Clock Interface Circuit

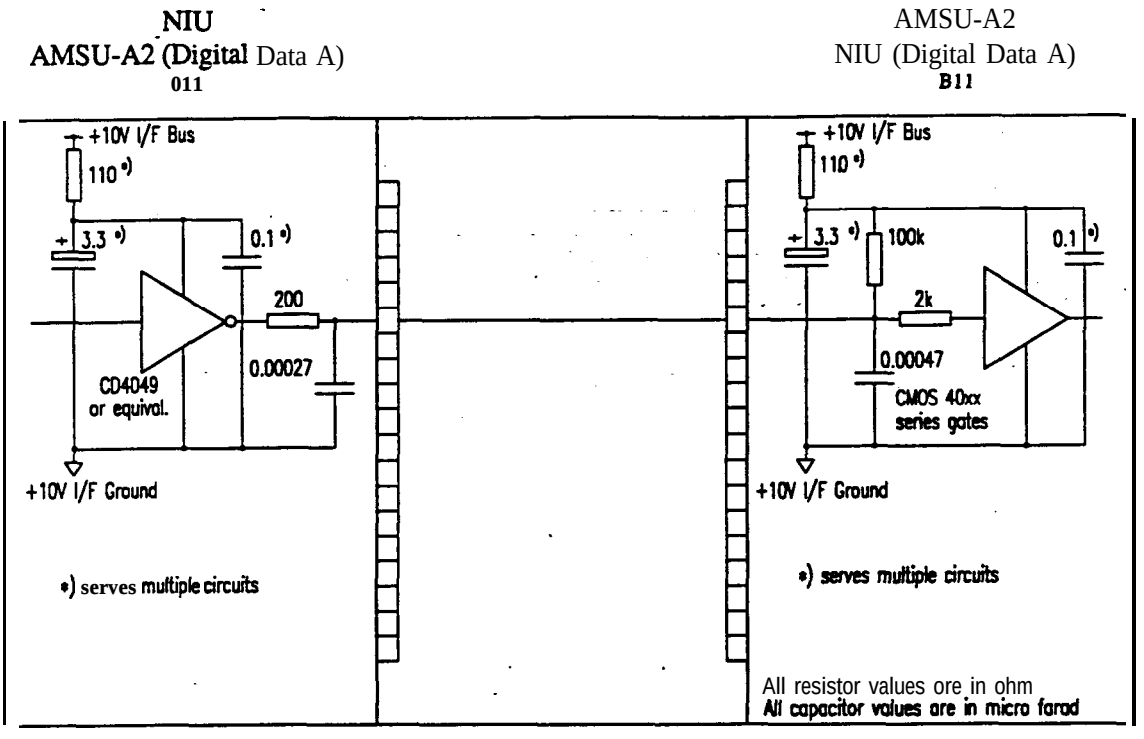

Fig. 3.5.23-8 : AMSU-A2 Fast CMOS - CMOS Interface Circuit

3.53. Signal Electrical Connectors

Table 3.5.3-1 identifies the signal electrical connector types at the AMSU-A2 boxes and Table 3.5.3-2 identifies the signal electrical connector types at the AMSU-A2 harness.

Connector	'Connector-Type	Function
JO2	TD1E9HS *)	Data (Digital A)
JO3	63-47000-001 (Triax, jack with male pin contact [1])	Clock
J04	TD1B25TS *)	Command
JO5	TD1A15TS *)	Digital B TLM
JO6	TD1C37TP *)	Analog TLM

*) ITT-Cannon filter pin connector

Table 3.5.3-l: Signal Electrical Connector Types at AMSU-A2 Boxes

1 Provided to METOP by Instrument Supplier.
Automatic Connector. Inc., Commack. N.Y. 11725 CAGE 94375

Connector	Connector-Type	Function
P02	DEMA-9P-NMB	Data (Digital A)
P03	RFL 6321-90 (Ml) (Triax receptacle [2])	Clock
P04	DBMA-25P-NMB	Command
P05	DAMA-15P-NMB	Digital B TLM
PO6	DCMA-37S-NMB	Analog TLM

Table** 3.5.3-2: **Signal Electrical Connector Types at AMSU-A2 Harness

3.5.4. Signal Electrical Pin Allocation Lists

In these lists, the cross reference between connector pin, signal designation, Interface Data Sheet, target connector and target connector pin is defined and recorded as data base with the ***Dornier CAIE Tool*** (generation of the electrical interface part of the' ICD using computer aided interface engineering). Per connector one list is prepared.

Interface circuits of a unit are combined with the relevant interface circuit of the target unit by the CAIE Tool.

Interface Data Sheets can be found in § 3.5.2.1

The individual pin allocation lists are specified by 9 characters of a alpha numerical connector number. For the AMSU-A2 the first 3 characters are AM2. The 7th character is J for a box connector or P for a harness connector. The last hvo characters define the connector number.

Since these lists also specify wiring and shielding, they will form the basis for harness manufacturing.

The signal connector pin allocations at instrument level are described in Tables 3.5.4/1 to /5. The signal connector harness are described in Tables 3.5.4/6 to /10.

---

[2] Provided to METOP by Instrument Supplier.
Automatic Connector. Inc., Comma&. N.Y. 11725 CAGE 94376

Connector : 2AM2175J02 Item : AMSU-2 **Function :** Digital A Data **Backshell :** N/A
EMC-Category : 2 **Conn.-Type :** TD1E9HS

Pin	Signal Designation		Interface-Code Circ	Signal		Pos.	Grouping Ch. ID	Shd	Cable	Twist	Comment	New
02	16.64 kHz Clock AM2	SIG	B11	CLT-	-	D	CT01					
05	Data Output AM2	SIG	011	DGA-	-	D	DA02					
06	Data En AM2	SIG	B11	DEW	-	D	DN02					
07	8 sec Sync AM2	SIG	B11	SW-	-	D	ST03					
04	NC	-										
08	NC	-										
09	NC	-										
03	Signal Gnd P02 AM2	.GND		GND-	-		GD08					
01	Chassis Gnd AM2	-										

***Table 3.5.4/1 : Pin Allocation** List of Connector JO2*

Connector : FAM2 171103 Item : AMSU-2 Function : 1.248 MHz Clock **Backshell** : N/A
EMC-Category : F **Conn.-Type :** 63-47000-001

Pin	Signal Designation		Interface-Code Circ	Signal		Pos.	Grouping Ch. ID	Shd	Cable	Twist	Comment	New
C	1.248 MHz Clock AM2	SIG	B12	CLR-	-	D	CR02					
IS	1.248 MHz Cl.Rtn AM2	.ISHD	B12	CLR-	-	7	CR02				see Fii. 3.5.2.2-7	
OS	CABLESHIELD	.OSHD	SHD		-	0						

***Table 3.5.4/2 : Pin Allocation** List of Connector JO3*

Connector : 2AM2175J04 Item : AMSU-2 **Function :** Commands **Backshell :** N/A
EMC-Category : 2 **Conn.-Type :** TD1B25TS

Pin	Signal Designation		Interface-Code Circ	Signal	Pa.	Grouping Ch. ID	Shd	Cable	Twist	Comment	New
02	Mdl Pwr Dico AM2	SIG	B22	CCP-	- D	CP34					
03	SurvivalHtrPwrOn AM2	SIG	B22	CCP-	- D	CP35					
04	Mdl Totally Off AM2	SIG	B22	CCL-	- D	CL10					
05	Comr Mot Pwr AM2	SIG	B22	CCL-	-D	CL11					
06	Cold Cal Pos AM2	SIG	B22	CCL-	-D	CL12					
08	Ant Nad Pos AM2	SIG	B22	CCL-	- D	CL13					
09	Cold Cal Pos MSB AM2	SIG	B22	CCL-	- D	(114					
14	Mdl Pwr Connect AM2	SIG	B22	CCP-	- D	CP36					
15	SurvivalHtrPwrOffAM2	SIG	B22	CCP-	-D	CP37					
16	Scanner A2 AM2	SIG	B22	CCL-	- D	CL15					
17	Warm Cal Pos AM2	SIG	B22	CCL-	-D	(216					
18	Full Scan AM2	SIG	B22	CCL-	- D	(217					
19	Cold Cal Pos LSB AM2	SIG	B22	CCL-	- D	CL18					
12	+10V I/F Bus AM2	SUP	E13	DPB-	- D	DB03				'in 12 and Pin 24	
13	+10V I/F Bus AM2	.RTN	El3	DPB-	- 7	DB03				'in 13 and Pin 25	
24	+10V I/F Bus AM2	SUP	El3		- D					re shorted each at	
25	+10V I/F Bus AM2	.RTN	El3		- 7					ıe P-Connector	
07	NC	.-									
10	NC										
11	NC	.-									
20	NC	.-									
21	NC										
22	NC										
23	NC										
01	Chassis Gnd AM2										

Table 3.5.4/3 : *Fin Allocation **List** of Connector JO4*

Connector : 2AM2175J05 **Item :** AMSU-2 Function : **Digital B Telemetry Backshell :** N/A
EMC-Category : 2 **Conn.-Type :** TD1A15TS

Pin	Signal Designation		Interface-Code Circ	Signal	Pos.	Grouping Ch. ID	Shd	Cable	Twist	Comment	New
02	Mdl Pwr TLM AM2	SIG	032	TLD-	- D	TD40					
03	ColdCalPosMSBTLM AM2	SIG	032	TLD-	- D	TD41					
05	Comr Mot TLM AM2	SIG	032	TLD-	- D	TD42					
06	Cold Cal Pos TLM AM2	SIG	032	TLD-	- D	TD43					
09	Survival Htr TLM AM2	SIG	032	TLD-	- D	TD44					
11	ColdCalPosLSBTLM AM2	SIG	032	TLD-	- D	TD45					
12	Scanner A2 TLM AM2	SIG	032	TLD-	- D	TD46					
13	Warm Cal Pos TLM AM2	SIG	032	TLD-	- D	TD47					
14	Ant Nad Pos TLM AM2	SIG	032	TLD-	- D	TD48					
15	Full Scan TLM AM2	SIG	032	TLD-	-D	TD49					
04	NC	.-									
07	NC	.-									
08	NC	.-									
10	NC	.-									
01	Chassis Gnd AM2	.-									

*Table **3.5.4/4 :** Pin **Allocation List** of Connector JO5*

Connector : 2AM2175J06 **Item :** AMSU-2 Function : **Analog** Telemetry Backshell : **N/A**

EMC-category : 2 **Conn.-Type : TD1C37TP**

Pin	Signal Designation		Interface-Code Circ	Signal	Pos.	Grouping Ch. ID	Shd	Cable	Twist	Comment	New
02	RF Shelf A2 Temp AM2	SIG	127	TLA- -	D	[A66					
03	Comr Mot Temp AM2	SIG	127	TLA- -	D	[A67					
04	Warm Load A2Temp AM2	SIG	127	TLA- -	D	[A68					
08	A2 Drv Mot Curr AM2	SIG	)31	TLA- -	D	rA69					
09	+15VDC (AntDrv) AM2	SIG	)30	TLA- -	D	[A70					
10	+5VDC (AntDrv) AM2	SIG	)30	TLA- -	D	[A71					
11	+15VDC (SigProc) AM2	SIG	)30	TLA- -	D	[A72					
12	+5VDC (SigProc) AM2	SIG	)30	TLA- -	D	[A73					
13	+10VDC LO CH1 AM2	SIG	)30	TLA- -	D	rA74					
22	A2 Scan Mot Curr AM2	SIG	)31	TLA- -	D	[A75					
27	Comr Mot Curr AM2	SIG	)31	TLA- -	D	rA76					
28	-15VDC (AntDrv) AM2	SIG	129	TLA- -	D	[A77					
29	-15VDC (SigProc) AM2	SIG	)29	TLA- -	D	[A78					
30	+10VDC LO CH2 AM2	SIG	)30	TLA- -	D	rA79					
34	+10VDC (Receiver)AM2	SIG	)30	TLA- -	D	[A80					
20	+28V Swt TLM Bus AM2	.RTN									
05	NC	.-									
06	NC	.-									
07	NC	.-									
14	NC	.-									
15	NC	.-									
16	NC	.-									
17	NC	.-									
18	NC	.-									
19	NC	.-									
21	NC	.-									
23	NC	.-									
24	NC	.-									
25	NC	.-									
26	NC	.-									
31	NC	.-									
32	NC	.-									
33	NC	.-									
35	NC	.-									
36	NC	.-									
37	NC	.-									
01	Chassis Gnd AM2	.-									

Table 3.5.4/5 : Pin Allocation List of Connector JO6

Connector : 2AM2175P02 Item : AMSU-2 Function : Digital A Data Conn.-Type : DEMA-09P-NMB
EMC-Category : 2 Location : 175 Backshell : TBD

Pin	Signal Designation		Interface-Code Circ	Signal	Pos.	Ch. ID	Wiring	Grouping Shd	Cable	Twist	Comment	End-It.	Loc.	Connector	Pin	New
02	16.64 kHz Clock AM2	.SIG	311	CLT-	- D	CT01	SL-24					NIU	240	NIU240 Pa		
05	Data Output AM2	.SIG	311	DOA-	- D	DA02	SL-24					NHJ	240	NIU240 Pxx		
06	Data En AM2	.SIG	311	DEM-	- D	DN02	SL-24					NIU	240	NIU240 Pxx		
07	8 sec sync AM2	.SIG	311	SYV-	- D	ST03	SL-24					NIU	240	NIU240 Pxx		
04	NC	.-														
08	NC	.-														
09	NC	.-														
03	Signal Gnd PO2 AM2	.GND		GND-	-	GD08	SL-20					NIU	240	NIU240 Pxx		
01	Chassis Ond AM2	.-														

Table 3.5.4/6 : Pin Allocation List of Connector PO2 (For Information Only)

Connector : FAM2175P03 Item : AMSU-2 Function : 1.248 MHz Clock Conn.-Type : RFL6321-90(M1)
EMC-Category : F Loath : 175 Backshell : TBD

Pin	Signal Designation		Interface-Code Circ	Signal	Pos.	Ch. ID	Wiring	Grouping Shd	Cable	Twist	Comment	End-It.	Loc.	Connector	Pin	New
C	1.248 MHz Clock AM2	.SIG	B12	CLR-	- D	CR02	TRI-24					NIU	240	NIU240 Pxx		
IS	1.248 MHz CLRtn AM2	.ISHD	B12	CLR-	- 7	CR02	TRI-24				see Fig. 3.5.2.2-7	NIU	240	NIU240 Pxx		
OS	CABLE SHIELD	.OSHD	SHD		- 0											

Table 3.5.4/7 : Pin Allocation List of Connector PO3 (For Information Only)

Connector : 2AM2175P04 Item : AMSU-2 Function : Commands **Conn.-Type :** DBMA-25P-NMB
EMC-Category : 2 **Location :** 175 **Backshell : TBD**

Pin	Signal Designation		Interface-Code Circ	Signal	Pos.	Ch. ID	Wiring	Grouping Shd	Cable	Twist	Comment	Fhd-It.	Loc.	Connector Pin	New
02	Mdl Pwr Dico AM2	.SIG	122	CCP-	- D	CP34	SL-24					NIU	240	NIU240 Pxx	
03	SurvivalItrPwrOn AM2	.SIG	122	CCP-	- D	CP35	SL-24					NIU	240	NIU240 Pxx	
04	Mdl Totally ON AM2	.SIG	122	CCL-	- D	CL10	SL-24					NIU	240	NIU240 Pxx	
05	Comr Mot Pwr AM2	.SIG	122	CCL-	- D	CL11	SL-24					NIU	240	NIU240 Pxx	
06	Cold Cal Poe AM2	.SIG	122	CCL-	- D	CL12	SL-24					NIU	240	NIU240 Pxx	
08	Ant Nad Pos AM2	.SIG	122	CCL-	- D	CL13	SL-24					NIU	240	NIU240 Pxx	
09	Cold Cal Pos MSB AM2	.SIG	122	CCL-	- D	CL14	SL-24					NIU	240	NIU240 Pxx	
14	Mdl Pwr Conned AM2	.SIG	122	CCP-	- D	CP36	SL-24					NIU	240	NIU240 Pxx	
15	SurvivalItrPwrOffAM2	.SIG	122	CCP-	- D	CP37	SL-24					NIU	240	NIU240 Pxx	
16	Scanner A2 AM2	.SIG	122	CCL-	- D	CL15	SL-24					NIU	240	NIU240 Pxx	
17	Warm Cal Pos AM2	.SIG	122	CCL-	- D	CL16	SL-24					NIU	240	NIU240 Pxx	
18	Full Scan AM2	.SIG	122	CCL	- D	CL17	SL-24					NIU	240	NIU240 Pxx	
19	Cold Cal Pos LSB AM2	.SIG	122	CCL-	- D	CL18	SL-24					NIU	240	NIU240 Pxx	
12	+10V I/F Bus AM2	SUP	213	DPB-	- D	DB03	TP-24				Pin 12 and Pin 24	NIU	240	NIU240 Pxx	
13	+10V I/F Buy AM2	.RTN	213	DPB-	- 7	DB03	TP-24				Pin 13 and Pin 25	NIU	240	NIU240 Pxx	
24	+10V I/F Bus AM2	SUP	213		- D						are hated each at				
25	+ IOV I/F Bus AM2	.RTN	213		- 7						the P-Connector				
07	NC	.-													
IO	NC	.-													
II	NC	.-													
20	NC	.-													
21	NC	.-													
22	NC	.-													
23	NC	.-													
01	Chassis Gnd AM2	.-													

Table 3.5.4/8 : Pin Allocation List of Connector PO4 (For Information Only)

Connector : 2AM2175P05 Item : AMsu-2 Function : Digital B Telemetry Conn.-Type : DAMA-15P-NMB
EMC-Category : 2 Location : 175 Backshell : T B D

Pin	Signal Designation		Circ	Interface-Code Signal	Pos.	Ch. ID	Wiring	Grouping S b d	Cable	Twist	Comment	End-It.	Loc.	Connector	Pin	New
02	Mdl Pwr TLM AM2	.SIG	032	TLD- -	D	TD40	SL-24					NIU	240	NIU240Pxx		
03	ColdCalPosMSBTLM AM2	.SIG	032	TLD- -	D	TD41	SL-24					NIU	240	NIU240 Pxx		
05	Corn Mot TLM AM2	.SIG	032	TLD -	D	TD42	SL-24					NIU	2 4	NIU240 Pxx		
06	Cold Cal Pos TLM AM2	.SIG	032	TLD- -	D	TD43	SL-24					NIU	240	NIU240 Pxx		
09	Survival Htr TLM AM2	.SIG	032	TLD- -	D	TD44	SL-24					NIU	240	NIU240Pxx		
11	ColdCalPosl.SBTLM AM2	.SIG	032	TLD- -	D	TD45	SL-24					NIU	240	NIU240 Pnx		
12	Scanner A2 TLM AM2	.SIG	032	TLD- -	D	TD46	SL-24					NIU	240	NIU240 Pxx		
13	Warm Cal Pos TLM AM2	.SIG	032	TLD- -	D	tD47	SL-24					NIU	240	NIU240 Pxx		
14	Ant Nad Pos TLM AM2	.SIG	032	TLD- -	D	TD48	SL-24					NIU	240	NIU240 Pxx		
IS	Full Scm TLM AM2	.SIG	032	TLD -	D	TD49	SL-24					NIU	240	NIU240Pxx		
04	NC	.-														
07	NC	.-														
08	NC	.-														
IO	NC	.-														
01	Chassis Gnd AM2	.-														

Table 3.5.4/9 : Pin Allocation List of Connector P05

(For Information Only)

Connector : 2AM2175P06 **Item :** AMSU-2 Function : Analog **Telemetry Conn.-Type :** DCMA-37S-NMB
EMC-Category : 2 **Location :** 175 **Backshell :** T B D

Pin	Signal Designation		Interface-Code Circ	Signal	Pos.	Ch. ID	Wiring	Grouping Shd	Cable	Twist	Comment	End-It.	Loc.	Connector Pin	New
02	RF Shelf A2 Temp AM2	.SIG	O27	TLA-	- D	'A66	SL-24					NIU	240	NIU240 Pxx	
03	Comr Mot Temp AU2	.SIG	027	TLA-	- D	ΓA67	SL-24					NIU	240	NIU240 Pxx	
04	Warm Load A2Temp AU2	.SIG	027	TLA-	- D	ΓA68	SL-24					NIU	240	NIU240 Pxx	
0S	A2 Drv Mot Curr AU2	.SIG	O31	TLA-	- D	ΓA69	SL-24					NIU	240	NIU240 Pxx	
09	+15VDC (AntDrv) AU2	.SIG	030	TLA-	- D	ΓA70	SL-24					NIU	240	NIU240 Pxx	
10	+5VDC (AntDrv) AU2	.SIG	030	TLA-	- D	ΓA71	SL-24					NIU	240	NIU240 Pax	
11	+15VDC (SigProc) AU2	.SIG	030	TLA-	- D	ΓA72	SL-24					NIU	240	NIU240 Pxx	
I2	+5VDC (SigProc) AU2	.SIG	030	TLA-	- D	ΓA73	SL-24					NIU	240	NIU240 Pxx	
13	t IOVDC LO CH1 AU2	.SIG	O30	TLA-	- D	ΓA74	SL-24					NIU	240	NIU240 Pxx	
22	A2 San Mot Curr AU2	.SIG	031	TLA-	- D	ΓA75	SL-24					NIU	240	NIU240 Pxx	
27	Comr Mot Curr AU2	.SIG	031	TLA-	- D	rA76	SL-24					NIU	240	NIU240 Pxx	
28	-I5VDC (AntDrv) AU2	.SIG	029	TLA-	- D	ΓA77	SL-24					NIU	240	NIU240 Pxx	
29	-15VDC (SigProc) AM2	.SIG	029	TLA-	- D	ΓA78	SL-24					NIU	240	NIU240 Pxx	
30	t IOVDC LO CH2 AU2	.SIG	030	TLA-	- D	ΓA79	SL-24					NIU	240	NIU240 Pxx	
34	+10VDC (Receiver)AM2	.SIG	030	TLA-	- D	ΓA80	SL-24					NIU	240	NIU240 Pxx	
20	+28V Swt TLM Bus AU2	.RTN													
05	NC	.-													
06	NC	.-													
07	NC	.-													
14	NC	.-													
IS	NC	.-													
16	NC	.-													
17	NC	.-													
18	NC	.-													
19	NC	.-													
21	NC	.-													
23	NC	.-													
24	NC	.-													
25	NC	.-													
26	NC	.-													
31	NC	.-													
32	NC	.-													
33	NC	.-													
35	NC	.-													
36	NC	.-													
37	NC	.-													
01	Chassis Ond AU2	.-													

Table 3.5.4/10 : Pln Allocation List of Connector PO6

(For Information Only)

3.6. TEST INTERFACES

3.6.1. Electrical Test Interface Requirements.

3.6.1.1. Interface Data Sheets

N/A.

3.6.1.2. Interface Circuits

N/A.

3.6.2. Electrical Test Interface Connectors

Table 3.6.2-l identifies the test connector type at the AMSU-A2.

This connector is not for use on the METOP satellite.

Connector	Connector-Type	Function
J07	TD1C37HS *)	Test

*) ITT-Cannon filter pin connector

Table 3.42-l *: Test Connector Types at AMSU-A2 Boxes*

Insert connector list (PAL)

3.6.3. Electrical Test Interface Pin Allocation List

N/A.

3.7. HARNESS

The harness between METOP units and the AMSU-A2 is under the responsibility of the PLM, based on the connector & pin lay-out definition and electrical performances from § 3.4 and 3.5.2.

3.8. EMC INTERFACE DESCRIPTION

3.8.1. Electrical Bonding

3.8.1.1. General

The AMSU-A2 is electrically bonded to the METOP spacecraft structure by means of a METOP supplied bonding strap that is bolted to the instrument at location #3.

3.8.1.2. Joint Faces

N/A for AMSU-A2 : AMSU-A2 is thermally isolated.

3.8.1.3. Structural Parts

3.8.1.3.1. DC Resistance Between Mating Metal Structure Parts

N/A.

3.8.1.3.2. Bonding of Moveable Parts

N/A.

3.8.1.3.3. Bonding of Structural CFRP Parts

N/A.

3.8.1.3.4. Bonding of Carbon Fibre Face Sheets

N/A.

3.8.1.3.5. Bonding of Aluminium Honeycomb

~~Aluminium honeycomb shall be bonded to structure by a DC resistance of ≤ 10 Ω.~~

3.8.1.3.6. Bonding of Metal Fittings

N/A.

3.8.1.4. Unit Housings

3.8.1.4.1. Bonding of Unit Cases

N/A to AMSU-A2.

3.8.1.4.2. Bonding of Thermally Isolated Boxes

AMSU-A2 cases shall be bonded to spacecraft structure via a bonding strap with a maximum length to width ratio of 5:1. The resistance between unit case and clean aluminium structure shall be ≤10mΩ.

Insert a sketch with definition of bonding position. Picture reused from 2.1.1.

3.8.1.4.3. Bonding of Unit Mounted on CFRP of Non-Conductive Parts

N/A to AMSU-A2.

3.8.1.4.4. DC Resistance Between Adjacent Unit Case Parts

N/A to AMSU-A2.

3.8.1.4.5. DC Resistance Between Bonding Stud and Mounting Feet

N/A to AMSU-A2.

3.8.1.5. Thermal Blankets

3.8.1.5.1. Bonding of Thermal Blankets

Thermal blanket foil shall carry a conductive layer. Each electrically conductive layer of MLI shall be grounded to structure. *Surfaces which are* smaller than 100 cm^2 do not need to be grounded to structure. The number of bonding Points per sheet of MLI material shall be at least two Points at diagonal comer.

3.8.1.5.2. Thermal Blanket Surface Resistance

The DC resistance between the MLI bonding point and any point belonging to the metallized face of any foil shall be less than 50 Ω.

3.8.1.6. *Other* Conductive Components

N/A for AMSU-A2.

3.8.1.7. Cable and Harness Shields

N/A for AMSU-A2.

3.8.1.8. Connectors

N/A for AMSU-A2.

3.8.2. Grounding and Isolation

The grounding system of the instrument shall use separate grounds (see Figure 3.8.2-l) as follows :

- + 28 V Main Power Ground
- + 28 V Switched TLM Bus
- + 28 V Pulse Load Bus
- + 10 V Interface Ground
- Signal Ground

3.8.2.1. + 28 V Main Power Ground

The + 28 V main power return is grounded within the PCU to structure.

3.8.2.2. + 28 V Switched Telemetry Ground

The + 28 V switched telemetry return is grounded within the PCU to structure.

3.8.23. + 28 V Pulse Load Ground

The + 28 V pulse load return is grounded within the PCU to structure.

3.8.2.4. + 10 V Interface Ground

The + 10 V interface return is grounded within the NIU to structure.

3.825. Signal Ground

Signal ground is the power return line for the secondary side of the instrument DC/DC converters. The signal ground is grounded on Pin 3 of instrument connector J02.

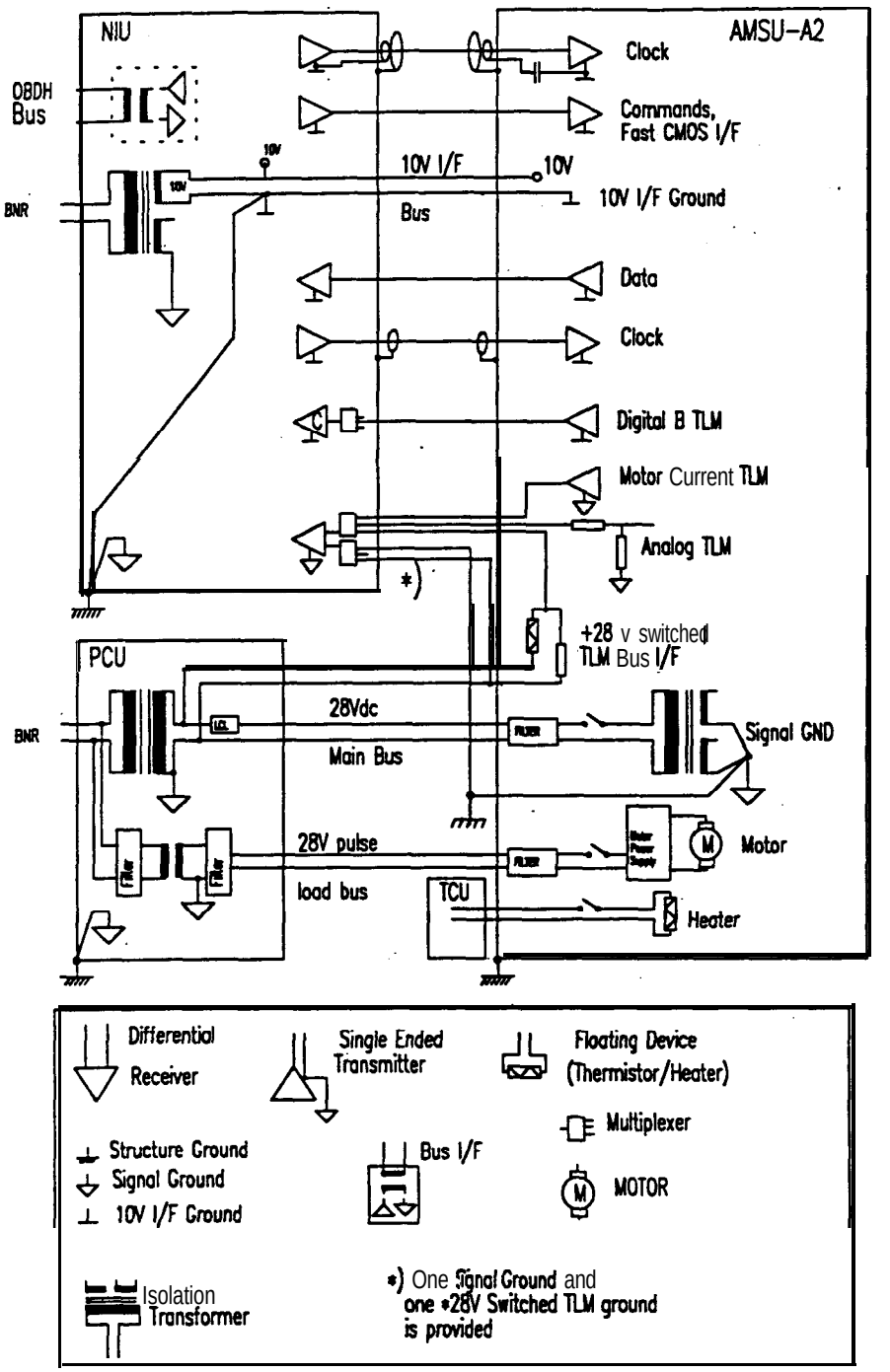

Figure 3.8.2-l : Grounding and Isolation Concept for AMSU-A2

3.8.3. Shielding

3.8.3.1. **Wire** Shielding

3.8.3.1.1. Bonding of Shields

N/A

3.8.3.1.2. Overall Shield

N/A

3.8.3.1.3. Shields as **Current-Carrying** Conductors

Shields shall not be used as intentional current- conductors and **not** as return lines for power and signal with the exception of the RF coaxial **lines.**

3.83.2. Case Shielding

N/A

38.4. **AMSU-A2 Frequency Characteristics**

The channel characteristics are given in § 1.22.

The non-channel **frequencies are :**

Frequency	Source
1.6 kHz	R/D Oscillator Motor Control Circuitry
208 kHz	DC/DC Converter
15.7 GHz	Channel 2 DRO

3.8.5. Magnetic Moment

The maximum magnetic moment of the instrument shall not exceed 650 mAm². TB (NASA)

List of Magnetic Material

Magnetic materials used in the instrument are listed in Table 3.8.5.-1

Material	Standard	Magnetic Characteristic	Remark
name of material	*AISI etc.*	*soft / hard*	
TBD_{AMS2}	TBD_{AMS2}	TBD_{AMS2}	

Table 3.8.5.-1 : Magnetic Materials Used in the Insbwnent

3.8.6. EMC Performance Requirements

The EMC performances for the AMSU-A2 are dealt within § 4.3.

3.9. RF INTERFACE DESCRIPTION

3.9.1. Maximum Allowed Interference

The in-band criterion for the maximum allowed receiver interference is defined as the interfering power (referred at the input waveguide) that shall not change the reading of the measured temperature by more than 20 % of the temperature sensitivity of that channel (NEAT).

The maximum level authorized for the total integrated power of spurious signals in the receiver bandwidth (referred at the input waveguide) is illustrated in Table 3.9.1-1 and in Figure 3.9.1-1.

Moreover, any spurious, referred at the input waveguide, whose frequency is outside the above in-band ranges, shall not change the reading of the measured temperature by more than 20 % of the temperature sensitivity of that channel. The maximum power authorized for those out-of-band spurious is illustrated in Table 3.9.1-1.

TABLE 3.9.1-I : AMSU-A2 TEMPLATE

	Frequency Range (See Note I)		*Levels (See Note 2)* T3C (NASA)
	From (GHz)	*To (GHz)*	*dBm*
Out-of-Band	*0*	*20.000*	*0*
	20.000	*23.646*	*-38*
In-Band	*23.646*	*23.655*	*-87*
Channel 1	*23.655*	23.945	*-127*
	23.945	*23.954*	*-87*
Out-of-Band	*23.954*	*31.298*	*-35*
In-Band	*31.298*	*31.300*	*-88*
Channel 2	31.300	31.500	-128
	31.500	31.502	-88
Out-of-Band	*31.502*	*40.000*	*-33*
	40.000	200.000	-19

Note 1 : The frequency range takes the oscillator frequency drift into account (see § 3.9.2. centre frequency stability).

Note 2 : The levels have been computed based on the nominal frequency ranges and on the NEAT from § 1.2.2.

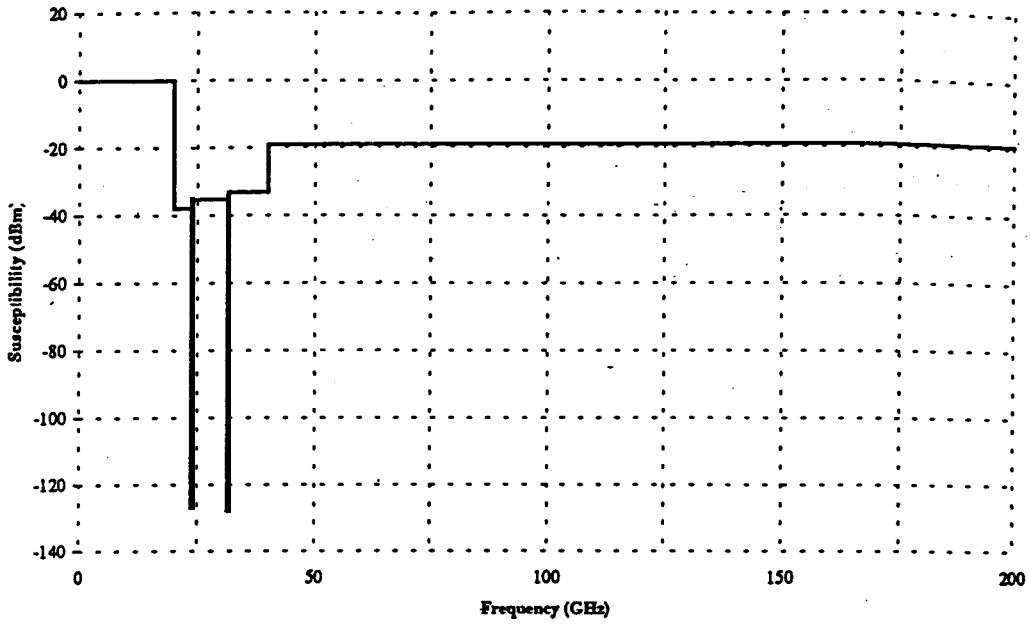

Figure 3.9.1-I : AiWSU4.2 Template

3.9.2. Local Oscillator Emissivity

The AMSU-A2 produces the following emissions at the input waveguide :

Channels	Centre Frequency (MHz)	Centre Frequency Stability (MHz)	Emissions (dBm) at Receiver Level
1	23800	± 10.0	-48
2	31400	± 10.0	-48

4. INSTRUMENT VERIFICATION DESCFUPTION

BLANK

4.1. MECHANICAL /STRUCTURAL VERIFICATION

4.1.1. Structural Analysis

4.1.1.1. Quasi-Static Loads (Interface)

Requirement for analysis will be determined by outcome of accommodation analytic results.

The METOP requirements are dealt with in § 2.2.8.

4.1.1.2. Structural /Dynamic Analyses

Requirement for analysis will be determined by outcome of accommodation analytic results.

4.1.13. Instrument Shock Environment

The AMSU-A2 will be subject to the following shock environment :

METOP Shock Levels (g peak, See notes)	
100 Hz	37 g
900 Hz	350 g (Q > 10) 310g (Q= 10)
2000 Hz	350 g (Q > 10) 310g (Q= 10)
4000 Hz	300 g

Notes

The acceleration shall be derived from the curve obtained by linear connection on a logarithmic chart of the provided points

The shock spectrum in each direction of the three orthogonal axes shall be equivalent to a half sine pulse of 0.5 ms duration and 200 g (zero to peak) amplitude.

4.1.2. Structural Tests

It is recognised by the Single Space Segment Team Of METOP, that instrument's capabilities are different from the METOP loads specified in § 4.1.2. The instrument's design and qualification status is summarized in Appendix of this section of the ICD. METOP's environment herein are initial predictions and will be updated following future analysis and the satellite structural model test campaign.

4.1.2.1. Structural Mathematical Model Validation

Delivered structural mathematical models (see § 2.2.8.5.) shall be verified by test and validated.

4.1.2.2. Vibration Test : High Level Sine Sweep

The AMSU-A2 will be subject to the sine vibration satellite level testing. Preliminary predictions of the worst case imposed environment are as follows :

METOP High Level Sine Sweep Levels (TBC_{MET} *)	
QUAL	All three axes 6 to 20 Hz ±9.3 mm 20 to 60 Hz ±15 g 60 to 100 Hz ±6 g sweep rate : 2 Oct/min.
ACC	All three axes 6 to 20 Hz ±7.5 mm 20 to 60 Hz ±12 g 60 to 100 Hz ±4.8 g Sweep rate : 4 Oct/min.

* : To be confirmed / updated after structural model testing.

Notching : TBD_{AMS2}

Note : for instruments with natural frequencies below 100 Hz, notching shall be defined to maintain the instrument interface loads within those predicted when the quasi-static design load is applied to the instrument, consistent with the launcher requirements.

Test instrumentation for sine vibration at system level : TBD_{AMS2}

4.1.23. Vibration Test : Sine Burst

METOP has no sine burst test requirement

4.13.4. Vibration Test : Random Levels

The AMSU-A2 will be subject to an acoustic environment during satellite tests which will result in an equivalent random input at the instrument interface. Preliminary prediction of this input is as follows :

METOP Random Vibration Levels (TBC$_{MET}$ *)			
	All Three Axes		
	Frequency Range (Hz)	Power Spectral Density g²/Hz	Slope (dB/Oct.)
QUAL	20 to 100		+3
	100 to 400	0.096	
	400 to 2000		-3 out-of-plane -4 in-plane
	Overall level : 9.8 g rms normal, 9.0 g rms lateral Duration 2 min per axis		
	All Three Axes		
	Frequency Range (Hz)	Power Spectral Density g²/Hz	Slope (dB/Oct.)
ACC	20 to 100		+3
	100 to 400	0.062	
	400 to 2000		-3 out-of-plane -4 in-plane
	Overall level : 7.8 g rms normal, 7.2 g rms lateral Duration 1 min per axis		

*: To be confirmed / updated after structural model testing.

4.1.2.5. Acoustic Test

The AMSU-A2 will be subject to an acoustic test at satellite level, as follows :

Octave Band Centre Frequency (Hz)	Qualification Level (dB)	Acceptance Level (Flight Limit)	Test Tolerance (dB)
31.5	132	128	-2, +4
63	134	130	-1, +3
125	139	135	-1, +3
250	143	139	-1, +3
500	138	134	-1, +3
1000	132	128	-1. +3
2000	128	124	-1. +3
4000	124	120	-4, +4
8000	120	116	-4, +4
Overall level	146	142	-1. +3
Test Duration	2 minutes	1 minute	

The equivalent random environment is illustrated in § 4.1.2.4.

4.2. THERMAL VERIFICATION : THERMAL TESTS

4.2.1. Thermal Bala

A thermal Balance Test (TB) Test validate the instrument thermal control and accommodation on METOP, and the AMSU mathematical model used for the temperature predictions for all flight cases (correlation instrument model within the' METOP thermal environment, with an accuracy better than ± 5 deg C on instrument transient and steady-state cases). This will be performed during the METOP system TB test. ~~The evaluation of test results at instrument level is Instrument Supplier responsibility.~~

42.2. Thermal Vacuum Tests

The thermal cycle vacuum tests at instrument level evaluate and demonstrate the functional performance of each unit under the extreme and nominal modes of operation while in vacuum and at temperatures more extreme than predicted for the orbit conditions.

The instrument (EM) qualification thermal vacuum test includes one cycle with a 12-hour dwell at the extremes of temperature. The test temperature extremes are 10 deg. C beyond the expected orbital operational temperature limits.

The instrument acceptance thermal / vacuum test includes eight cycles at ambient pressure (length of dwell at the temperature extremes [10 deg. C beyond projected operational limits] is determined by time required to stabilise temperature and run performance tests). Vacuum testing includes a temperature profile in which test is performed at levels 10 deg. C beyond projected operational. limits, at the not to be exceeded operational limits and at the nominal operating temperature. The current test temperature extremes are +48 deg. C and -12 deg. C.

4.3. EMC VERIFICATION

43.1. EMC Performance Requirements

4.3.1.1. Conducted Emission

The conducted emission on each individual power line shall not exceed the limits as given below.

4.3.1.1.1. AMSU-A2 Design Requirements

Conducted Emissions on the +28 Volt Main Bus and +28 Volt Switched Telemetry Bus

Load Current Ripple

The peak to peak amplitude of the steady state load current ripple shall not exceed 2% of the maximum average steady state current drawn by the unit from the +28 V Main bus. The fundamental frequency of load current ripple shall not exceed 500 kHz.

Inrush Current Rate (Load Current Rate)

The rate of change of load current shall not exceed *20* mA/µs.

Inrush Current (Transient Load Current)

Requirement per individual bus.
Exclusive of instrument turn-on, transient load currents drawn by the instrument shall not exceed 150 % of the maximum average steady state current drawn from the +28 V Main bus. Steady State operation shall be attained by within 30 ms from the start of the transient. A transient is defined as an event having a duration of less than 50 ms, non-repetitive. Steady State is defined as an event having a duration of greater than 50 ms, non repetitive.

Requirement for combined 28 V busses.
At turn-on, the combined current drawn from all +28 Volt busses shall not exceed 3 Amperes peak Steady state operation shall be attained within 1 second form the start of the turn-on transient.

Conducted Emissions on the +28 Volt Pulse Load Bus

Load Current Ripple

The peak to peak amplitude of steady state load current ripple shall not exceed 10 % of the maximum average current drawn by the unit from the +28 Pulse Load bus. This current ripple excludes *repetitive* current pulses created by stepper motor or heater switching loads. The fundamental frequency of the load current ripple shall not exceed 500 kHz.

Inrush Current Rate (Load Current Rate)

The rate of change of load current shall not exceed 30 mA/µs.

Inrush Current (Maximum Current Pulse Load)

The maximum current pulse load shall not exceed 1 *Ampere and* shall *have* a maximum duration of 1 second.

Conducted Emissions on the +10 Volt Interface Bus

Load Current Ripple

The peak to peak amplitude of the steady state load current ripple shall not exceed 5% of the maximum average steady state current drawn by the unit from the +10 V bus. The fundamental frequency of load current ripple shall not exceed 2.5 MHz.

Inrush Current Rate (Load Current Rate)

The rate of change of load current shall not exceed *20* mA/µs.

inrush Current (Transient Load Current)

Transient load currents drawn by the instrument shall not exceed 125 % of the maximum average steady state current drawn from the +10 V bus. Steady State operation shall be attained by within 50 ms from the start of the transient

Test methods CE01 and *CEO3 are used in* accordance with § *4.3.3. An* oscilloscope *with* a current probe (D.C. to *30* MHz minimum bandwidth) may be used in lieu of the EMI meter specified by the test method.

4.3.1.1.2. METOP Requirements

For instrument characterisation only. METOP assumes compatibility of the instrument with these requirements.

For the four regulated buses, the fundamental frequency of load current ripple shall not exceed 100 kHz.

Conducted emission in the frequency range 30 Hz to 50 MHz, which may appear on +28 V Main Bus positive and return leads in differential and common mode, shall be within the maximum specified levels of the Figure 4.3.1.1-1.

Note : The maximum frequency of 50 MHz can be reduced to the highest frequency (+ 9 harmonics) used by the instrument.

The Common Mode CE requirement is a specific METOP requirement.

Conducted emission in the frequency range 30 Hz to 50 MHz, which may appear on Heater Power Bus positive and return leads, shall be within the maximum specified levels of the Figure 4.3.1.1-2.

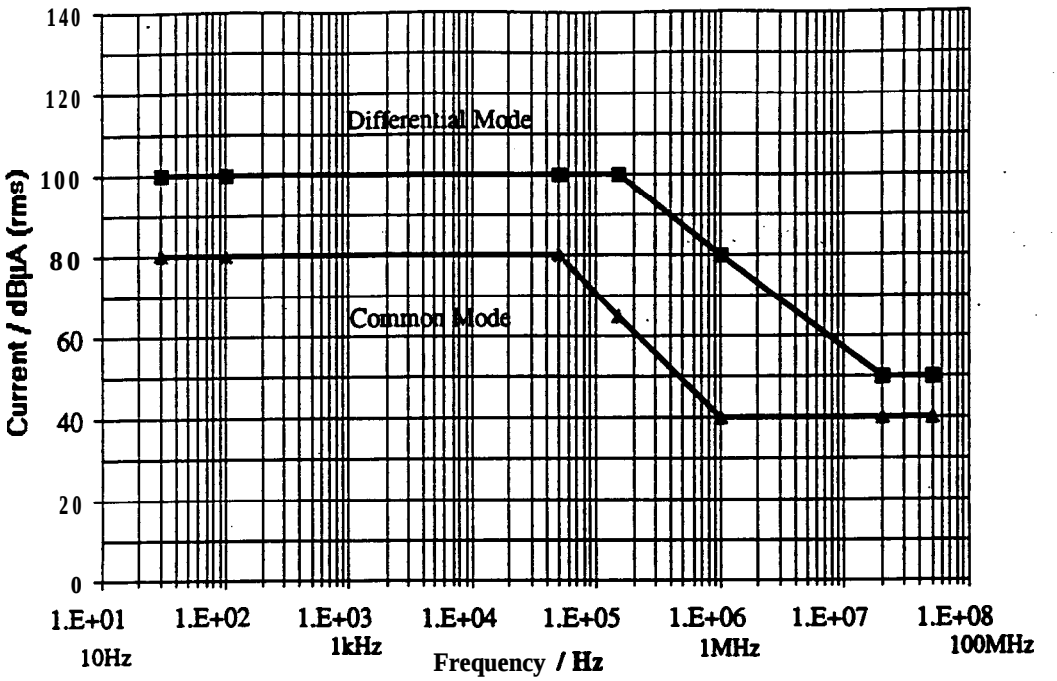

*Fig. 4.3.1.1-I : Conducted **Emission** Limit, NB, DM, CM, 28V Reg. Power **Leads, PLM** Instrument*

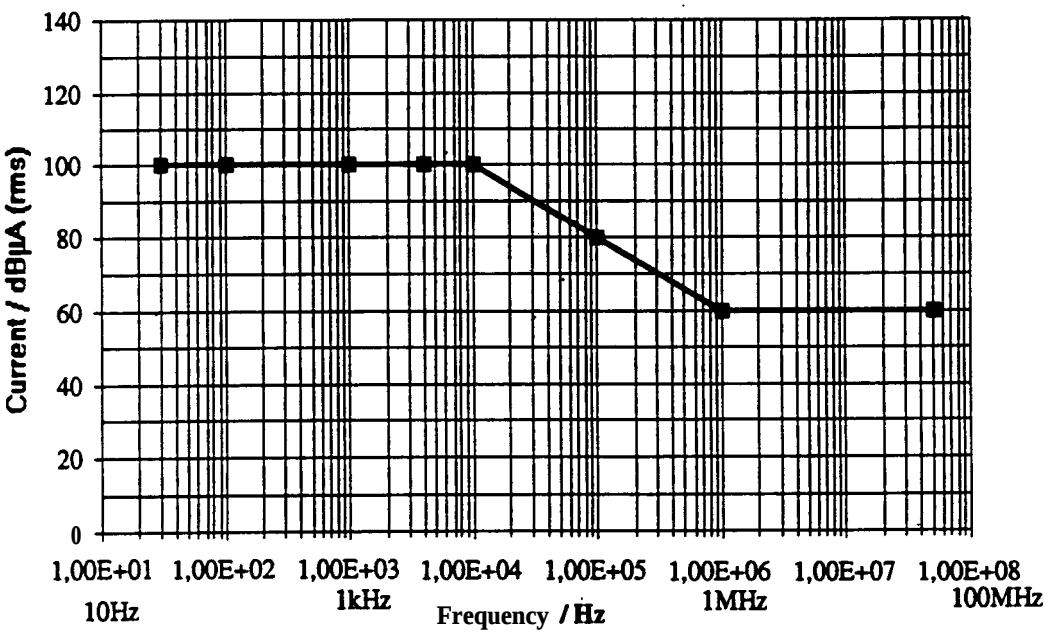

Fig. 4.3.1.1-2 : Conducted Emission Limit, NB, DM, Thermal Control Heaters

4.3.1.2. Conducted Susceptibility

Frequency Domain

'The instrument shall operate without degraded performance in the presence of sinusoidal noise coupled into the power lines between the frequency range 30 Hz and 150 kHz:

+28 V Main Bus / 28 V Switched TLM Bus	injected Voltage	300 mVpp
+28 V Pulse Load bus	injected Voltage	400 mVpp
+10 V Interface Bus	injected Voltage	100 mVpp

The test set-up shall be in accordance to § 4.3.3.

Time Domain

The instrument shall operate without degraded performance when subjected to a series of transient pulses, 10 µsec in width and PRF of 10 Hz applied to the power lines for 10 min. :

+28 V Main Bus / 28 V Switched TLM Bus	spike level	+10 V / -12 V
+28 V Pulse Load bus	spike level	+8 V / -13 V
+10 V Interface Bus	spike level	+1 V / -1 V

The test method CS06 shall be in accordance to § 4.3.3.

Special METOP Requirement

For instrument characterisation only. METOP assumes compatibility of the instrument with these requirements.

In addition to above requirements, the AMSU-A2 will experience a common mode sinusoidal noise 300 mV_{pp} in the frequency range 100 kHz and 50 MHz. The noise will be injected between :

the +28 V main bus return line and unit housing, according to Pigure 4.3.1.2-1

and the +10 V interface bus return line and unit housing, according to Pigure 4.3.1.2-2

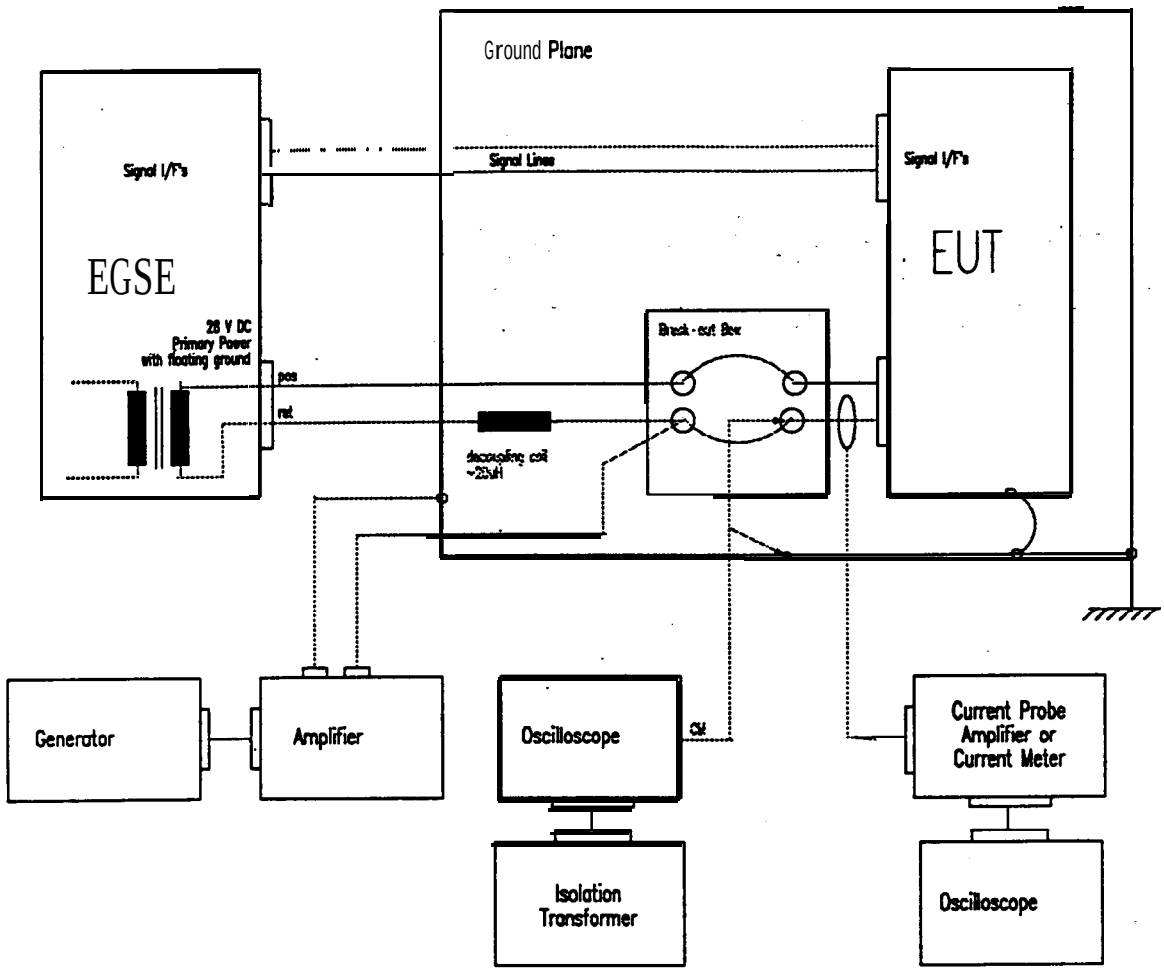

Fig. 4.3.1.2-I : Common Mode Noise Test on the +28 V Main Bus

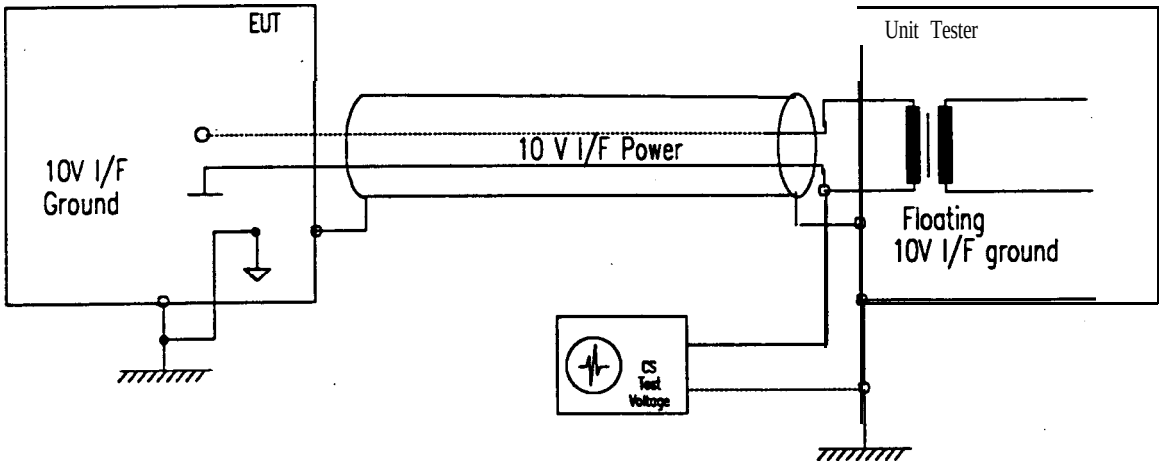

Fig. 4.3.1.2-2 : Common Mode Noise Test on the + 10 V Interface Bus

4.3.1.3. Radiated Emission

4.3.1.3.1. Mil-Std-REO2 Requirements

Broad-band and Narrow-band radiated emission measurements shall be made over the frequency range of 14 kHz to 2 GHz in accordance with Mil-Std 4611462 RE02 requirements. For the discrete ADCS and SARP-3 sensitive bands listed below. broad-band noise and discrete signals shall. not exceed -60 dBm when tested in accordance with the methods of § 4.3.1.3.2 below.

59.458 MHz ± 0.5 kHz	60.100 MHz ± 0.5 kHz
141.360 MHz ± 0.5 kHz	142.900 MHz ± 0.5 kHz
282.733 MHz ± 0.5 kHz	285.813 MHz ± 0.5 kHz
371.921 MHz ± 0.5 kHz	375.972 MHz ± 0.5 kHz
624.925 MHz ± 0.5 kHz	631.730 MHz ± 0.5 kHz
743.841 MHz ± 0.5 kHz	751.944 MHz ± 0.5 kHz

4.3.1.3.2. SARR, SARP-3 and ADCS Receiver Channel Guard Limits

Emission measurements shall be made in accordance with Mil-Std-461/462 RE02 with the EMI meter replaced by a MITEQ preamp (AU-2A-0550 or equivalent) and a spectrum analyzer (HP 8566a or equivalent). The instrument under test and the associated clock and control signals shall have power applied and thedifference in the analyzer levels shall be noted for both white noise and spurious signals.

The test antenna shall be tuned to the centre of each of the four bands below. Prior to making the actual measurements, the test antenna shall be demated and the cable terminated in 50 ohms. The noise floor of the equipment shall be verified to be below the specified maximum level for each measurement level. A guideline for establishing the resolution bandwidth is 100 Hz for both the -150 and -145 dBm levels, 1 kHz for the -125 dBm levels and 3 kHz for the -100 dBm levels. The specified maximum radiation limits for all discrete signals and noise Rower are listed below.

Frequency range (MHz)	Radiation Limit (dBm)	E-field Limit (dB µV/m) For Reference Only	Notes
118.00 - 120.000	-100	18.9	121.5 MHz
120.000 - 121.450	-125	-6	121.5 MHz
121.450 - 121.485	-145	-26	121.5 MHz
121.485 - 121.515	-150	-31	121.5 MHz
121.515 - 121.550	-145	-26	121.5 MHz
121.550 - 123.000	-125	-5.9	121.5 MHz
123.000 - 125.000	-100	19.2	121.5 MHz
236.000 - 240.000	-100	24.9	243.0 MHz
240.000 - 242.925	-125	0	243.0 MHz
242.925 - 242.975	-145	-20	243.0 MHz
242.975 - 243.025	-150	-25	243.0 MHz
243.025 - 243.075	-145	-20	243.0 MHz
243.075 - 246.000	-125	0.1	243.0 MHz
246.000 - 250.000	-100	25.3	243.0 MHz
385.100 - 401.100	-100	29.4	406.05 MHz
401.100 - 405.900	-125	4.5	406.05 MHz
405.900 - 406.000	-145	-15.5	406.05 MHz
406.000 - 406.100	-150	-20.5	406.05 MHz
406.100 - 406.200	-145	-15.5	406.05 MHz
406.200 - 411.000	-125	4.6	406.05 MHz
411.000 - 425.000	-100	29.9	406.05 MHz
396.000 - 401.500	-125	4.4	401.65 MHz
401.500 - 401.600	-145	-15.6	401.65 MHz
401.600 - 401.700	-150	-20.6	401.65 MHz
401.700 - 401.800	-145	-15.6	401.65 MHz
401.800 - 406.000	-125	4.5	401.65 MHz

4.3.1.3.3. - METOP Requirements

For instrument characterisation only. METOP assumes compatibility of the instrument with this requirement

The radiated emissions in the frequency range 14 kHz to 2 GHz shall not exceed the limit given in Table 4.3.1.3-1.

Frequency Range	E-Field Limits (dBµV/m) TBC_{MET}	Remark
10 kHz . . . 2 GHz	+ 50	Covered by Mil-Std 46 1/462 RE02 *
2 GHz ... 40 GHz	+ 70	

* : The requirements of Mil-Std 46 1/462 RE02 are more stringent than the METOP RE limits

Table** 4.3.1.3-I : **RE-E- Field Limit

Radiated emissions in the METOP payload and system receiver channel guard bands shall not exceed the limits defined here below :

Frequency Range (MHz)	Radiation Limit (dBm)	E-Field Level (dBµV/m) TBC_{MET}	Remark
1217 - 1257	N/A	+ 19	GRAS
1565 - 1614	N/A	+ 21	
205 1.9 - 2055.0	NIA	+ 8	SBS
5254.7 - 5255.3	N/A	+ 18	ASCAT
400-500	N/A	+ 20	Applies during launch only
5450 - 5825	N/A	+ 61	

Table 4.3.1.3-2 : Radiated Emission Notches for AMSU-A2

4.3.2. EMC Analysis

The EMC of the AMSU-A2 shall be characterised by test and test discrepancies will be described by the Instrument Supplier. METOP will further assess the impacts on METOP performance.

Magnetic Moments

The magnetic moments shall be determined by analysis or test.

4.3.3. EMC Tests

EMC tests shall be performed in accordance with MIL-STD-462C.

Compliance with EMC requirements shall be demonstrated on all models delivered to METOP.

The Radiated Emission tests are applicable on all models delivered to METOP. (TBC NAS 4)

The Conducted Emission tests are applicable only on the first instrument model delivered to METOP.

* by test or analysis on subsequent units

43.1.4. Radiated Susceptibility

The instrument will experience a radiated electric field of 1 Vrms/m for frequencies between 14 kHz and 1 GHz, and 2 Vrms/m for frequency between 1 GHz and 18 GHz. The radiated E-Field shall be amplitude modulated by a sine wave at 1 kHz with a modulation depth of 50 %.

The test method is defined in § 4.3.3.

In addition the instrument wii be exposed to the following levels :

Frequency	Level TBC$_{MET}$	Modulation	Source Unit
5.25 GHz	45 Vrms/m	Pulse width = 8.22 ms. chirp rate = -50 kHz/ms, PRF = 4.94	ASCAT
		Pulse width = 10.32 ms, chirp rate = ±24 kHz/ms, PRF = 4.94 Hz	
7.8 GHz	13 Vrms/m	Pulsed 35 MHz PRF, duty cycle 50%	XBS
1.7013 GHz	52 Vrms/m	Pulsed 2.25 MHz PRF, duty cycle 50%	HRPT
468 MHz	18 Vrms/m	Pulsed 1 kHz PRF, duty cycle 50%	A-DCS
137.1 MHz	32 Vrms/m	Pulsed 38.25 kHz PRF, duty cycle 50%	LRPT
1.5445 GHz	31 Vrms/m	FM, 400 kHz peak deviation modulation index M=l	SARR
2.230 GHz	10 Vrms/m	Pulsed 4 kHz PRF, duty cycle 50%	S-Band Downlink

4.4. ELECTRICAL FUNCTIONAL VERIFICATION

In general, the test which are described here below are performed to ascertain the instrument functional performances and culminate with the instrument calibration.

As regards the tests performed after delivery, they are described in § 5 and mainly deal with instrument health checks performed both at ambient and in thermal vacuum environment.

4.4.1. Electrical Interface Tests

In general, through&t the instrument build-out, every interface is thoroughly checked to ensure the compatibility, the adequacy of the electrical interfaces, in propagation from the sensor output / input up to the instrument electronics outputs to the spacecraft on-board equipment, for the basic circuitry and signals : power, measurement data, housekeeping data, commands, clocks. sampling signals...

From a system point of view, the essential step is the measurement of the spacecraft interface signals and characteristics. The operational mode of the spacecraft system shall be simulated to ascertain interface adequacy : special attention is to be paid for the command and aquisition timing and circuit loading should be representative of the on-board characteristics.

4.42. Functional Test

It is the sole reqxmsibiity of the Instrument Supplier to define and verify the proper functions of the instrument prior. to delivery to METOP. This type of teats are tailored to the specific instrument function verification and they serve as instrument health checks that are performed routinely throughout the instrument development programme.

A subset of these tests will constitute latex the core of the system testing when the instrument is integrated on-board the PLM.

4.43. Performance Test

It is also the sole responsibility of the Instrument Supplia to define and verify the ultimate mission performances of the instrument prior to delivery to METOP. This type of tests are tailored to the specific instrument performances and they are achieved ultimately with the instrument calibration which requires a rather sophisticated and controlled test set-up.

A subset of these tests may later constitute the system performance teat with a reduced on-ground set-up. A go / no-go approach is preferred at system level (PLM and Satellite). due to the complexity of the test set-up and the AIT schedule limitations.

Calibration

It is the sole responsibility of the Instrument Supplier to calibrate the instrument prior to delivery to METOP. Re-calibration, if deemed necessary, will also be under the responsibility of the Instrument

Supplier. The calibration- data shall be ma& available on-request for the preparation of the system integrated instrument performance test.

APPENDIX : INSTRUMENT ACHIEVED QUALIFICATION STATUS

Vibration Test : High Level Sine Sweep

The instrument has not been subject to a High Level Sine Sweep test.

Vibration Test : Sine Burst

The instrument has been subject to the following Sine Burst environment :

	Sine Burst Test Levels
QUAL	All three axes Test level : 16.5 g 'Frequency : 30 / 40 Hz Duration : 0.5 second
ACC	All three axes Test level : 13.2 g Frequency : 30 / 40 Hz Duration : 0.5 second

Vibration Test : Random Levels

The instrument has been subject to the following random environment :

Random Vibration Test Levels			
	All Three Axes		
	Frequency Range (Hz)	Power Spectral Density g^2/Hz	Slope (dB/Oct.)
Q	20 to 75	0.011	
U	75 to 150		+10
A	150 to 500	0.11	
L	500 to 2000		-7
	Overall level : 8.8 g rms Duration 1 min per axis		
	All Three Axes		
	Frequency Range (Hz)	Power Spectral Density g^2/Hz	Slope (dB/Oct.)
	20 to 75	0.005	
A	75 to 150		+10
C	150 to 500	0.05	
C	500 to 2000		-7
	Overall level : 5.9 g rms Duration 1 min per axis		

5. INSTRUMENT GSE AND AIV INTERFACES

BLANK

5.1. INSTRUMENT GSE DESCRIPTION

5.1.1. Bench Test Equipment

The Instrument Supplier will provide all test equipment required for bench test of the instrument. This equipment shall include :

- STE (Special Test Equipment)
- Printer, Terminal and Keyboard
- Power converter to European mains standard
- LN_2 Buckets (Containers and Millimetre Wave Absorbers)

One set of equipment will be delivered for operating both instruments AMSU-Al and AMSU-A2.

Figure 5.1.1-1 provides au overview of the STE.

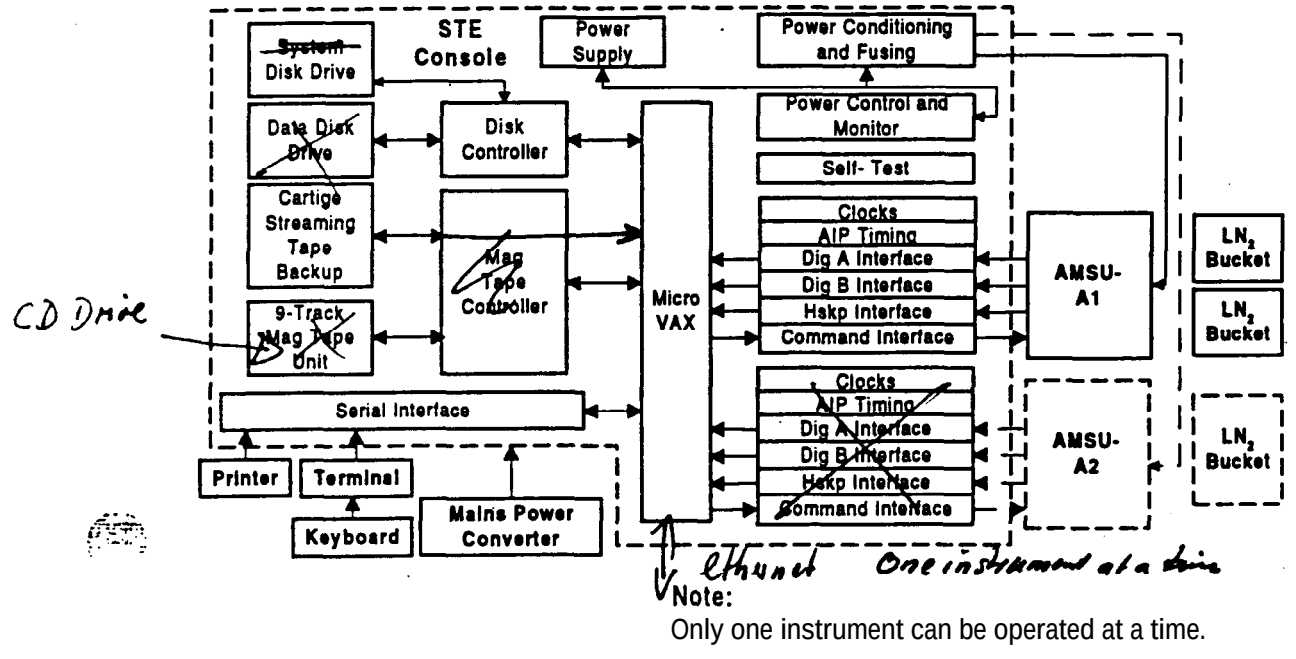

Figure 5.1.1-I : STE Overview

The STE is designed to perform all monitor, calibration and self-test functions for AMSU-AI and AMSU-A2. It consists of the STE Console interfacing with the hvo instrument units, the Printer. Terminal, Keyboard and the Mains Power Converter. This equipment records, displays, monitors and computes thermo-electric temperature data. In addition, the STE provides all signals and data interfaces required by the instrument which are normally supplied by the spacecraft. These signals include power, timing, command status, and both analog and digital sensor data. The STE software performs all the monitor, calibration and self-test functions.

The STE to instrument interface cables will be provided by the Instrument Supplier.

The following pieces of standard equipment will be supplied by METOP for use during bench tests of the instrument : TBD_{INST}

5.1.2. GSE for Integration with PLM OCOE

The Instrument Supplier will provide for TV testing :

- three spacecraft blackbody test targets (two for Al, one for A2) - See AD1 1 and AD12.
- one Temperature Read Out System
- data processing equipment (= STE TBC_{AMS2})

The spacecraft blackbody test targets are to be used to provide a well known radiometric reference for testing the functionality of the AMSU-A instruments at PLM and higher level. They are not intended to be used for calibration of the instrument.

There is one blackbody test for AMSU-A2 (two for AMSU-Al), interfacing with a dual Temperature Read Out System Each target has embedded PRT's (Platinum Resistance Thermometers) distributed about the baseplate of the load For Al-l and Al-2, there are 7 PRT's each, while for A2 there are 10. The PRT electrical interface will be flying leads. The Instrument Supplier will provide the connectors to the Temperature Read Out System. The relevant cabling interface shall be manufactured by METOP. Details on me AMSU-A targets can be found in AD13.

One Temperature Read Out System will be provided to operate the targets for Al and A2 simultaneously. It shall be noted that the Temperature Read Out System must run at 60 Hz. Therefore the instrument (NASA) provided converter shall be used The Temperature Read Out System shall interface with the PLM OCOE via the instrument provided data processing equipment. Commands to, and data from the Temperature Read Out System are accomplished by ASCII codes via an RS 232 link to the data processing equipment. The data acquisition software is provided in a non-volatile memory of the Temperature Read Out System controller. In case of data loss / software errors, the software may be refreshed by down-loading from a standard PC via the RS232 interface. The Instrument Supplier will provide disk and operation manual for this purpose.

5.1.3. Mechanical Ground Support Equipment

The Instrument Supplier shall provide fixtures which can be used for safely lifting and transporting the instruments. The handling fixtures shall be used to lift the instruments from the shipping containers and shall be capable of mounting the instruments when the spacecraft is either in vertical or horizontal position. Provisions shallbemadetoliftwith a crane.

The following fixtures shall be provided :
Compatibility of these Tiros specific MGSE is TBC Metop.

- AMSU-A1 and AMSU-A2 Handling Fixture, part number 1333060-l (part of shipping container), drawing AD14.
- AMSU-A2 Spacecraft Integration Fixture ; part number 1333090- 1 ; drawing AD15a.
  This fixture provides lifting arm for rotation and attachment to the crane.
- AMSU-A2 Rotating Handling Fixture ; part number 1333061-l ; drawing AD15b
  This fixture provides means to rotate the instrument by 90 deg. after removal from the shipping container.
- AMSU-A2 Vertical Lift Fixture ; part number 1338217-14 ; drawing AD15c
  This fixture provide means to remove the instrument from the shipping container using the crane.
- AMSU-A2 Vertical Lift Fixture ; part number 1338217-15 ; drawing AD15c
  This fixture provide means to remove the instrument from the shipping container using the crane.

Need for drill template is ~~TBD_{MET}~~ needed.

Containers shall be supplied for shipping and storage at the METOP integration and test sites for each deliverable instrument.

The instrument storage containers will be sealed and back-filled with dry N2 to one atmosphere ~~(TBC$_{INST}$)~~

Protective covers shall be delivered with each instrument for each scan cavity (reflector cover) : two for Al, one for A2.

5.1.4. Self-Contained Special Test Equipment

Three LN2 buckets shall be delivered to enable simultaneous operation of AMSU-A1 and AMSU-A2 during functional testing. Approximate sixes are TBD_{INST} (drawing TBD).

5.2. INSTRUMENT GSE INTERFACES

'52.1. Interfaces with PLM OCOE

5.2.1.1. General

The configuration of AMSU-A instrument test equipment within the overall check-out equipment for the METOP payload module is shown in Figure 5.2.1.1-1 for the ambient test configuration and in Figure 5.2.1.1-2 for TV testing. In all cases, the only interface between the OCOE and the instrument test equipment will' be a LAN connection between the NOAA instrument DAPB (N-DAPB) and the instrument data processing equipment. Details can be found in RD11.

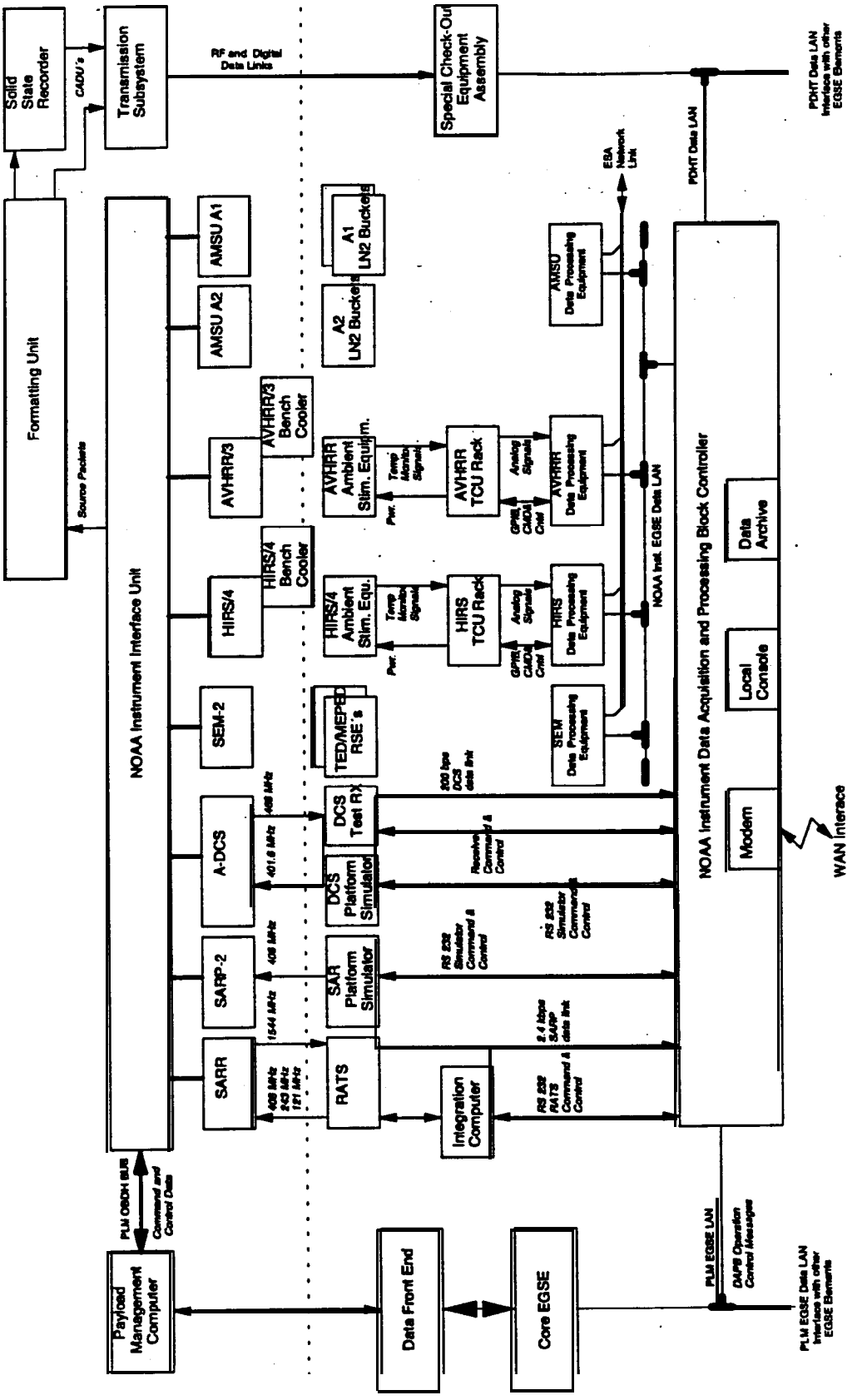

*Fig. 5.2.1.1-I : Test Equipment **Interfaces** With **PLM** OCOE in Ambient Test **Configuration***

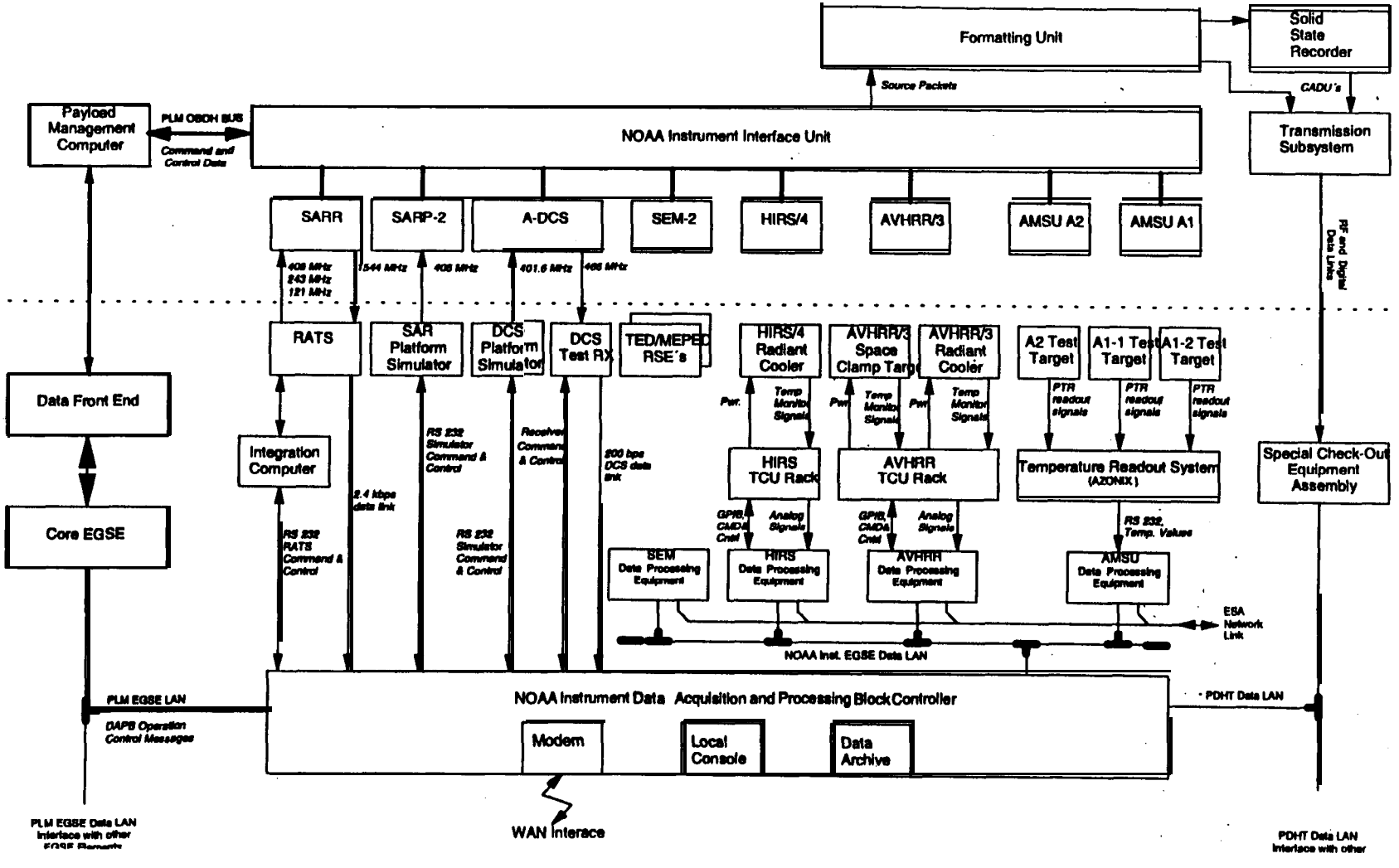

Fig. 5.2.1.1-2 : Test Equipment Interfaces With PLM OCOE in Thermal Vacuum Configuration

5.2.1.2. Stimulus/Feedback Equipment Interface

5.2.1.2.1. Physical / Electrical Interface

Not applicable for AMSU-A1/2 : the stimulus data will be directly acquired by the instrument provided data processing equipment.

5.2.1.2.2. Protocol Interface

Not applicable for AMSU-A1/2 : the stimulus data will be directly acquired by the instrument provided data processing equipment.

5.2.1.2.3. Stimulus /Feedback Data Handling Requirements

Target temperature data will be acquired and processed in the instrument data processing equipment. The data shall be formatted into standard CCSDS source packets and transferred to the N-DAPB for archiving purpose. No further processing of the target temperature data in the N-DAPB is required.

53.13. Interface with Instrument-Provided Data Processing Equipment

5.2.1.3.1. Physical / Electrical Interface

The AMSU-A1/2 measuremeut data shall be made available to the instrument data processing equipment (= STE TBC_{AMS2}) via a 100/10 Base-T Ethernet LAN interface.

5.2.1.3.2. Protocol Interface

The data sent to the instrument data processing equipment is the complete source packet as generated by the NIU.

For support of the measuremeut data processing, AMSU-A1/2 related housekeeping data, like digital "B" and analog data, as well as a copy of instrument related commands sent to the NIU, can be made available. For all communication between the instrument data processing equipment and the METOP provided N-DAPB, standard CCSDS source packets shall be used as unique protocol data units.

Further details on the protocol are defined in AD10 and ADS.

5.2.1.4. Measurement Data Evaluation

5.2.1.4.1. Instrument Measurement Data Format Definition

The instrument measurement data format as defined in § 3.3 presents the user data space. The overall source packet layout is defined in Figure 5.2.1.4- 1 below.

PACKET PRIMARY HEADER (6 Octets)							PACKETDATA FIELD		
Packet Identification (2 octets)				Packet Sequence Control (2 octets)		Packet Length (2 octets)	Secon-dary Header (6 oct.)	Source Data: User Data (1120 oct.)	Source Data: Packet Error Control (2 octets)
Version Number 3 bits	Type Indic. 1 bit	Sec. Header Flag 1 bit	AP ID 11 bits	Seq. Flag 2 bits	Packet Seq. count 14 bits		Tie stamp	See § 33.3.	
16 bits				16 bits		16 bits	48 bits		16 bits

Figure 5.2.4.1-I : AMSU-A2 Source Packet Lay-Out

Primary Header Field

Packet Identification

The Packet ID Field will follow the following format :

Bit Position	Subfield Name	Set to	Code
0..2	Version Number	'Version 1'	000
3	Type Indicator	'TM'	0
4	Packet Secondary Header Flag	-	'0' for absence '1' for presence of Secondary Header within the TM packet
5..15	Application Process Identifier (APID)	'AMSU-A2'	40

Packet Sequence Control

The Packet Sequence Control Field will follow the following format :

Bit Position	Subfield name	Set to	Code
0..1	Sequence Flag	'Unsegmented'	11
2..15	Packet Sequence Count	Incremented for each packet	Sequential bii continuous count

Packet Sequence Count is a method of counting the number of packets generated by the application. This significant parameter is a sequential count of the Packet Sequence Control Fields. This field will start with a value of zero and increment to 3FFF (HEX, or 16384). At this point it will roll-over and continue again from zero. The count will restart from zero after pow&on. No reset of the count is allowed before reaching 16383.

Packet Length

This field contains a bii number which permits to identify the length of the User Data and Packet Error Control fields. Its value is defined as follows *: number of octets of the Packet Data field - 1.*

Packet Data Field

The Source Data field is split in three parts.

The first part is the Secondary Header which is used for time code information. For AMSU-A2, the time stamp contains the NIU on-board time latched at the falling edge of the 8 second synchronization pulse.

The second part is the area that contains the user data, as described in § 3.3.2.

The third part is the Packet Error Control (PEC) field that amsists of a Cyclic Redundancy Checksum (CRC), computed over all the octets composing the packets, except the PEC. The generator of the polynomial is : $G(x) = x^{16} + x^{12} + x^5 + 1$.

5.2.1.4.2. Reference Data Presentation

Not applicable for AMSU-A

5.2.1.4.3. Data Comparison Requirements

Not applicable for AMSU-A

5.2.1.4.4. Data Processing Algorithms

N/A to AMSU-A : all data processing for AMSU-Al and 2 will be done by the instrument delivered data processing equipment.

533. Interfaces with-the PLM On-Board Equipment

533.1. Test Harness and Connectors

During system tests there is no test harness or test connectors to the on-board equipment to be used. The instrument test connectors are for use by the Instrument Supplier for calibration purposes only.

5.2.2.2. Special Test **Adapters (T-Junctions, Break-Out Boxes)**

Instrument to PLM avionics interfaces are all except one per instrument via standard sub-D type connectors; therefore no special adapter is needed from the instrument. The exceptions are one triax connector for each instrument for the 1.248 MHz clock.
One specific breakout box will be provided for all instruments
Standard break-out boxes adapting to sub-D type connectors will be provided by METOP to support limited performance testing of the instrument.

The AMSU-A instrument is supplied with connector savers.

5.2.23. Stimuli Source Configuration / Arrangement Requirement.

The LN_2 buckets used for ambient testing, shall never be located above the instruments due to potential instrument damage by leaking LN_2. Details on the AMSU-A LN_2 buckets can be found in document: TBD_{INST}.

The configuration of the blackbody target for AMSU-A2 is given in the Instrument Supplier drawing AD11. The target has two fittings on the back for the connection of LN_2 lines. The target shall be placed within a distance of 32 mm from the AMSU-A instrument, using METOP-provided fixtures (TBD_{MET}). The detailed arrangement of the interfaces to the supporting scaffoldings are TBD_{MET}.

5.23. Interfaces With Other PLM GSE

Interface drawings to target scaffoldings are $TBD_{INST/MET}$.

5.2.4. Interfaces with AIT and Launch Site Facilities

5.2.4.1. Mains Power

The instrument test equipment shall be powered during all phase of integration and testing through a mains frequency / voltage converter to be provided together with the instrument This converter will be supplied from mains power via a METOP provided isolation transformer with following output characteristics :

- Voltage : 230 V AC (± 10%), ~~10~~ 15 A max., single phase

  Frequency : 50 Hz ± 1 Hz

- Power plug standards used within the METOP project for 230 V is DIN 49441/CEE7, power sockets DIN 499440/CEE7

The actual estimated steady state power consumption of the instrument is as follows :

- STE : TBD_{INST} VA
- Temperature Read Out System : TBD_{INST} VA

5.2.4.2. Cooling / Thermal Dissipation Requirements

Instrument cooling during bench tests is not required.

5.2.4.3. Purging Gas Requirements

See § 6.1.4.

5.2.4.4. GN_2 / LN_2 Supply

For back-tilling of transport and storage containers, GN_2 per Fed Spec. BB-N-441b Type 1, Class 1, Grade A or equivalent shall be used.

The LN_2 (80 K) consumption will be 9 kg / hour for each target, valid for a pressure of 5 PSI at the target.

5.2.45. Test Chamber Wall Feed-through Panels

For TV tests, each of the 3 blackbody targets shall be supplied via 2 LN_2 tubes.

The tubing shall be insulated outside the thermal vacuum chamber. The pressure on the inlet side of the LN_2 tubes should be 4 PSI. The input nitrogen should contain no bubble (no bi-phase state). The maintenance of the recommended input pressure near ~~4~~ 5 PSI would help to attain this goal. On the outlet side, the pressure should be as low as possible, preferable below 1.0 PSI, to minimize back pressure. The tube diameter should be larger than 25 mm and its length less than 12.2 m. Lines should constantly downhill. PSI gauges and valves on the input and output lines shall be installed to aid in the control of the nitrogen flow.

Electrical feed&roughs shall be provided for the ~~24~~ 74 PRT channels. For each channel, 4 lines shall be provided.

5.2.4.6. Public **Data Net** Communication Requirements

The METOP AIT and launch site facilities will provided access to a public data network in order to enable data exchange with the Instrument Suppliers for off-line data evaluation at the Instrument Supplier premises.

As a baseline the file transfer ~~procedures~~ protocol (FTP) via INTERNET will be used, however other TCP / IP application layers via INTERNET and / or modem can be discussed.

5.2.4.7. **Physical Interfaces**

For set-up of the instrument test equipment, an area of ~~TBD~~ 12 $_{INST}$ m^2 as a minimum shall be provided in a temperature and humidity controlled class 100,000 clean area.

The detailed physical data are presented in Table 5.2.4.7-l.

Unit	Dimension [m] **L x W x H**	**Mass [kg]**	**Remarks**
Container A 1	1.4 x 1.4 x 1.4	370.00	
Container A2	1.4 x 1.4 x 1.4	370.00	
STE Console	0.9 x 1.2 x 1.5	250.00	
LN_2 bucket Al-l	0.4 x 0.4 x 0.4	5.00	Incl. LN_2
LN_2 bucket Al -2	0.4 x 0.4 x 0.4	5.00	Incl. LN_2
LN_2 bucket A2	0.4 x 0.4 x 0.4	5.00	Incl. LN_2
Temperature Read Out system	0.9 x 0.9 x 0.9	25.00	
Target Al-l	0 0.21 x 0.26	16.43	
Target A 1-2	0 0.21 x 0.26	16.43	
Target A2	0 **0.35 x 0.40**	**52.56**	
Voltage Converter	0.9 x 0.9 x 0.9	45.00	

Table* 5.2.4.7-l : *Physical Data

5.3. INSTRUMENT GROUND OPERATION REQUIREMENTS

53.1. General

Instrument operational constraints are presented in §1.4.1. Testprocedures may deviate from these.

Instrument modes and in orbit operations are described in § 1.4 and § 1.5.

Instrument telecommands are described in § 3.2.2.

For the ground operations, the acknowledgement of the commands by the instrument is done using Analog Housekeeping and Digital B data from the instrument, as described in § 3.2.3..

Conditions for testing

Test Level AMSU-A2	Ambient Condition			TV Condition			Cooling Conditions
	Stimuli	GSE	Tested Channels	Stimuli	GSE	Tested Channels	
Incoming Inspection	LN2 bucket	STE	All				
Pre-Integration	LN2 bucket	Data processing equipment	All				
PLM Electrical Test S/L Test	LN2 bucket	Data processing equipment	All				
PLM TV Test				Blackbody test target	Temp. Read Out System Data processing equipment	All	LN_2 for blackbody test target

Table 5.3.1-I : Use *if GSE and Stimuli for AMSU-A2 Testing*

5.3.2. Command and Control Sequences

5.3.2.1. Ambient Conditions

TBD_{INST}

5.3.2.2. Thermal Vacuum Conditions

TBD_{INST}

5.33. Hazards / Precautions

There is no hazard to be expected for the instrument neither to personnel nor to other spacecraft hardware.

During all stages of ground handling, ESD protection is required (electrostatic protective clothing and ground straps).

Persons handling the instrument should wear gloves at all times.

5.4. INSTRUMENT ACCEPTANCE AT AIT SITE

54.1. Unpacking / Packing and Handling Requirements

For all instrument handling and mounting, the delivered handling fixture shall be used. All packing / unpacking, handling and incoming inspection will be done according to the relevant Instrument Supplier provided procedures.

The instrument shall be handled Only with anti-static gloves.

5.4.2. Incoming Inspection

The incoming inspection starts as soon as instrument equipment arrives at the integration site After unpacking under cleanroom conditions, the following will be carried out :

- Visual Inspection of Instrument and GSE
- Dimensional/flatness check
- Units Weighing
- Bench Testing
- Calibrated measurement table and calibrated gage blocks.

Bench Level Tests

Prior to installation and to the PLM and electrical integration with PLM avionics, the instruments shall undergo a bench level check-out to demonstrate aliveness and instrument readiness for the subsequent system level AIT activities.

The instrument, mounted on the handling plate (AD14), will be set up on a test bench (ag. a table with conductive surface) and shall be connected to the instrument test equipment. Then a series of check-out activities shall be carried out as required to validate the instrument readiness.

The test equipment (e.g. a portable bench test equipment) shall be provided by the Instrument Supplier and shall reside at the PLM and satellite AIV sites to support instrument troubleshooting if necessary.. Operation of the instrument and its bench test equipment is done by the Instrument Supplier team in accordance to the following instrument provided procedures and manuals (ADl6). The use of stimuli and EGSE is as per Table 5.3.1-1.

5.43. Instrument Self-Compatibility Test

N/A

5.5. INTEGRATION ON METOP

55.1. Pre-Integration

Prior to the installation in the PLM, the instrument will be pre-integrated with the NIU and parts of the NIU test equipment as well as the power conditioning unit. The corresponding set-up of on-board units and ground support equipment is shown in Figure 5.5.1-l.

The purposes of the pre-integration activities is to verify electrical interfaces between instruments and NIU and PCU, to develop instrument specific test sequences, and to refine and validate the DAPB operation separately from the PLM level AIT in order to reduce the overall integration time.

The activities carried out with the instruments in the NIU pre-integration are electrical integration and instrument IST´s as described in § 53.3 below.

The physical arrangement of the instruments during pre-integration will be on desks with conductive surface. The interconnection to the NIU and PCU is accomplished with a METOP-provided test cable harness. Pre-integration activities are done in a clean room environment as required.

After completion of the pre-integration activities the instruments together with the NIU and the PCU will be installed in the payload module. An abbreviated electrical integration and part of the IST´s are then repeated.

The use of stimuli and EGSE is as per Table 5.3.1-1.

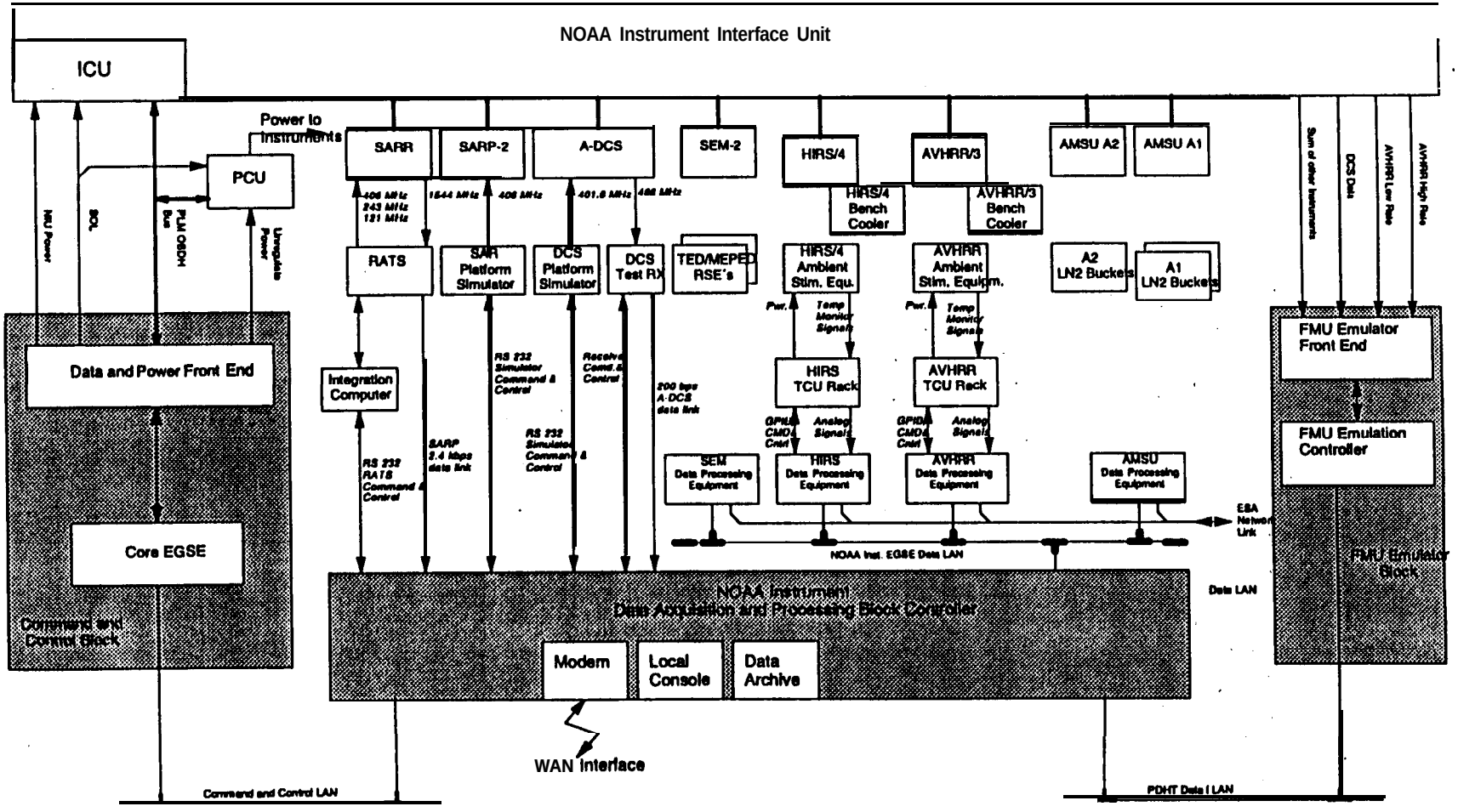

Figure 5.5.1-1 : Set-Up for Instrument Pre-Integration

5.5.2. Mechanical / Thermal Integration

The instrument mechanical / thermal integration includes the following activities:

- Physical installation to associated PLM panels according to agreed procedures including thermal insulation / filling and Other
- Mechanical adjustment asrequired
- Installation of thermal fillers /insulators as required
- Mounting of thermal blankets
- Bonding measurement between equipment case and PLM structure
- Mechanical integration of pre-integrated instrument panels to the payload carrier structure

5.5.3. Electrical Integration and IST's

The electrical integration of the instrument is done after the integration of its GSE. The purpose of the electrical integration of the instrument on-board equipment is twofold : to verify that the interfaces between the instrument and the PLM avionics are as specified, and to accomplish instrument operation commissioning within the PLM environment.

The following activities are carried out for electrical interface verification :

Instrument Grounding/Isolation Check : before mating any connector with the system harness it is verified, that designated grounding pins are properly terminated to Chassis, and other connector pins are isolated

Safety Check : it is verified before connecting the system harness, that there is no unexpected dangerous voltage, nor a short to chassis ground

T-Junction Tests : instrument connectors are mated with the PLM harness one by one via T-junctions, which allow measuring signal characteristics. Power connectors are mated first, followed by command interface connectors and telemetry interface connectors. The instrument is operated from the PLM Command & Control Block (CCB) by sending commands manually. Essential signal parameters such as rise/fall times, signal levels, signal timing, inrush currents and power consumption are recorded and compared against expected (specification) values.,

The instrument electrical integration procedures will be prepared by the PLM AIT team and reviewed and supported by the Instrument Supplier.

Verification of the instrument interfaces will be followed by an instrument IST. The purpose of this test is to perform a reference instrument check-out in the overall system environment.

The instrument will be operated in all relevant modes including degraded modes and redundancy activation. Full instrument operability validation is achieved in the IST. This comprises both the on-board equipment and the ground support equipment and check-out software. It is to be noted that the check-out software, at least the AIT data base with the TM/TC parameter definitions will be re-used during mission operation. Instrument specific control files will be refined and validated in the IST.

In addition to the. above objectives, the IST serves to produce reference data sets for the subsequent environmental and system function test programs.

The use of stimuli and EGSE is as per Table 5.3.1-1.

5.5.4. Integration of GSE

5.5.4.1. Integration of GSE with the Flight Equipment

N/A to AMSU-A

Note : The instrument integration with the STE shall be performed as defined in the bench level test procedure AD17.

5.5.4.2. GSE Integration with PLM OCOE

The EGSE integration is done prior to the integration of the on-board equipment. During this activity, the instrument-provided test equipment shall be connected with the METOP provided PLM EGSE. Generally, EGSE integration basically consists of au end-to-end communication check to demonstrate full operability under control of the Command and Control Block (CCB).

The instrument GSE integration procedures will be prepared by the PLM AIT team and reviewed and supported by the Instrument Supplier.

5.6. INSTRUMENT OPERATION CONSTRAINTS DURING PLM AND SATELLITE SYSTEM TESTS

5.6.1. System Environmental Test Levels

5.6.1.1. Structural Tests

The instrument shall not undergo vibration tests with reflector cover on.

5.6.1.2. Thermal Tests

The instrument shall not undergo thermal tests with reflector cover on.

5.6.1.3. EMC/RFC Tests

During instrument, PLM and satellite level testing, the EMC / RFC levels as listed in §3.8., 3.9 and 4.3. shall not be exceeded.

The instrument shall not be demagnetized.

5.6.2. Function and Performance Tests

The following descriptions shall provide a better understanding of the system level tests and are to be understood as for information only.

The use of stimuli and EGSE is as per Table 5.3.1-l.

5.6.2.1. System Functional Tests (SFT)

The system functional test will verify the overall system performance and operability in a series of mission relevant modes. Back up modes, degraded modes and mode transitions will be included The SFT procedures will be composed of control files which have been validated during IST's.

5.633. Special Performance Test (SPT)

SPT's serve to execute specific performance verifications in the overall system configuration for all those parameters which have contributions from more than one subsystem or for test cases which require a special set-up and operation condition. A typical example is a bit error performance test which involves elements of data acquisition, formatting and transmission.

For the instrument, it is assumed that full performance has been demonstrated as part of the instrument acceptance test program. and therefore no instrument specific performance testing is required on system level.

5.633. Abbreviated Functional Tests (AFT)

The abbreviated function test is composed of a subset of control files and procedures from the system functional test. Its purpose is to demonstrate system integrity after major set-up changes and after transport. No measurement data evaluation will be included in the AFT's but only a verification that the measurement data streams are present. Therefore, no instrument stimulus generation and feedback data acquisition will be done.

5.7. INSTRUMENT CONSTRAINTS ON GROUND ENVIRONMENTAL CONDITIONS

5.7.1. AIT Site

AMSU-A2, when held by handling fixture, may be positioned in any orientation.

No calibration or re-calibration of the instrument is foreseen in the system AIV programme.

The test connector cover on J7 is considered as flight hardware and shall remain installed at all times.

The reflector cover and the connector dust caps (J1 through J6) shall be installed at all times when the instrument is not in use.

5.7.2. Launch Site

N/A.

5.73. Transportation

To avoid damage to the instrument, it shall be transported in a sealed container. pressurized with dry N_2, when not yet integrated to the spacecraft TBC_{INST}. For transport monitoring shockrecorders shall be used TBD_{INST}.

5.7.4. Storage

For instrument storage the sealed containers shall be back-filled with dry N_2 to one atmosphere. Purging is not required.

The storage temperature extremes shall be as per § 2.3.2-l.

The humidity limits shall not exceed 90 % when the instrument is in the shipping container and sealed. When the shipping container is open, the humidity limit is less than 55 %.

Other maintenance, as for example re-calibration, is not planned during storage.

5.8. LAUNCH CAMPAIGN

5.8.1. Launch Preparation

Check-Out on the Launch Range

Instrument launch operations before encapsulation of the satellite into **the launcher fairing** will be a **series** of functional tests as already done during the **AIT** phase. **After encapsulation** of the **satellite,** there will be only limited command and control access via **umbilical to** the service **module** and the payload module avionics. Therefore, instruments will generally not be operated after **spacecraft** encapsulation.

During launch preparation the aligmnent cube surfaces have to be **taped** with a low reflectivity tape for stray light suppression reasons.

Furthermore it has to be assured that the test connector cover (J7) is installed.

5.83. Red Tagged Items

- Reflector cover
- Connector savers **(J1** through **J6)**

6. PRODUCT ASSURANCE

BLANK

Compliance of the AMSU-A2 with the following PA requirements is NASA's responsibility.

The PA approach for the AMSU-A2 is dealt within AD1. ~~Specific PA constraints / rules are~~ dealt ~~within the following sections.~~

6.1. CLEANLINESS / CONTAMINATION

6.1.1. &posited Contamination Level

At the instrument delivery to METOP, the deposited contamination levelsshallbelessthan:

- External surfaces :

  Molecular contamination : $\leq 2.10^{-7}$ g/cm²

  Particulate contamination : level 500, as per MIL-STD-1246B

- Internal surfaces : levels compatible with the instrument performances.

These contamination levels shall be certified at delivery, and verification performed after packing / transportation and arrival to the METOP integration site.

Bearing lubricant (Apiezon C with PbNp additive) contamination : TBD_{MET}.

6.1.2. Integration Facilities

The instrument, after delivery, will be integrated in a class 100 000 clean room, as per FED-STD-209D, or better.

6.13. Instrumen t Aperture Protection

The AMSU-A2 is delivered with one antenna cover.

All instrument functions can be checked with the protective covers installed.

As a general rule, all covers can only be removed in a class 100 000 clean or better. For PLM and satellite system tests, deviations from this rule are accepted, as dealt within § 5.6.

6.1.4. Purging

No purging is required for the AMSU-A2 during METOP satellite or PLM level AIT activities (as long as the instrument is in a class 100 000 clean or better environment).

During transit and during storage, the unit should be stored in its shipping container. that has been purged and back-filled with dry nitrogen.

6.1.5. Space Conditioning

Bake-out of instrument harness and MLIs at 60 deg. C : Yes

The last hot cycle of the thermal vacuum test performed at instrument level shall be maintained till the outgassing flux is less than 1. 10^{-7} g/cm².hr for a duration of five successive hours. This shall be permanently monitored during the test by TQCMs facing the specimen. The temperature of this last level shall be 60 deg. C (instrument unpowered), provided this does not harm any element of the instrument

6.1.6. Contamination Witness Plate

The AMSU-A2 delivered with a permanently installed witness plate (mirror) on the instrument This is used for further control by the Instrument Supplier of the contamination after delivery for integration to the METOP spacecraft The position of this mirror is illustrated in the Mechanical Interface Drawing (TBD_{AMS2}).

At appropriate times, the witness plate will be removed and examined by the Instrument Supplier for contaminants... during which time an alternate witness mirror will be mounted on the instrument. As a minimum, such controls shall be performed at delivery Of the PLM, with all instruments integrated to the Satellite Contractor, before and after TB / TV tests, and before launch

6.1.7. Decontamination Features/Heaters

N/A to AMSU-A2.

6.1.8. Instrument Bagging

The AMSU-A2 shall be bagged with a TBD_{AMS2} protective film following TBD_{AMS2} instructions for system acoustic test, system pyro chock test, thermal vacuum test preparation and during transportation.

6.2. FAILURE PROPAGATION THROUGH THE INTERFACES

The failure propagation through the interfaces from the AMSU-A2 to METOP is analysed within TBD_{AMS2}.

The failure propagation through the interfaces from the METOP to AMSU-A2 is analysed within TBD_{MET}.

6.3. SAFETY REGULATIONS

The AMSU-A2 shall be compliant with the safety requirements from AD1.

The following is a list of hazards contained within the instrument, its associated Ground Support Equipment, and any other special equipment needed fur transportation, handling, *assembly,* integration and test.

Hazard	Item
Radioactive Source	None
Toxic Sources	None
Corrosive Materials	None
Pressurized Systems	None
Ignition Sources	None
Pyrotechnics / Ordonance	None
Cryogenics / Cooling Fluid	None

Table 6.1/1 : Hazard List

The following is a list of consequences of failures of the instrument, its associated GSE and any other special equipment needed for transportation, handling, assembly, integration and test..

Consequence	Reference to Safety File
Violation of mechanical requirements	None
Violation of electrical requirements	None
Unintentional pyro firing	None
Violation of radiation requirements	None
Unintentional ignition	None
Release of debris	None
Leakage / rupture	None
Unintentional deployment	None

Table 6.1/2 : Consequence of Failures